DATA SHEET

NEC

MOS INTEGRATED CIRCUIT

μPD78P083(A)

8-BIT SINGLE-CHIP MICROCONTROLLER

DESCRIPTION

The μPD78P083(A) is a member of the μPD78083 Subseries of the 78K/0 Series products. Comparing with the μPD78P083 (standard), more strict quality assurance programs are applied to this product (called Special of the quality grade in NEC). The μPD78P083(A) uses one-time PROM instead of internal ROMs of the μPD78081(A) and μPD78082(A).

Because this device can be programmed by users, it is ideally suited for applications involving the evaluation of systems in development stages, small-scale production of many different products, and rapid development and time-to-market of a new product.

The details of functions are described in the user's manuals. Be sure to read the following manuals before designing.

μPD78083 Subseries User's Manual : U12176E
78K/0 Series User's Manual — Instructions : IEU-1372

FEATURES

- Pin-compatible with mask ROM version (except V_{PP} pin)
- Internal PROM: 24 Kbytes [Note]
  - μPD78P083CU(A), μPD78P083GB(A): One-time programmable (ideally suited for small-scale production)
- Internal high-speed RAM: 512 bytes [Note]
- Can be operated in the same supply voltage as the mask ROM version (V_{DD} = 1.8 to 5.5 V)
- Corresponding to QTOP™ Microcontrollers (under planning)

Note The internal PROM and internal high-speed RAM capacities can be changed by setting the internal memory size switching register (IMS).

Remarks **1.** QTOP microcontroller is a general term for microcontrollers which incorporate one-time PROM and are totally supported by NEC's programming service (from programming to marking, screening and verification).

2. For the differences between PROM and Mask ROM versions, refer to **Chapter 1. DIFFERENCES BETWEEN THE μPD78P083(A) AND MASK ROM VERSIONS**.

The information in this document is subject to change without notice.

Document No. U12175EJ1V0DS00 (1st edition)
Date Published March 1997 N
Printed in Japan

ORDERING INFORMATION

Part Number	Package	Internal ROM
μPD78P083CU(A)	42-pin plastic shrink DIP (600 mil)	One-Time PROM
μPD78P083GB(A)-3B4	44-pin plastic QFP (10 × 10 mm)	One-Time PROM
μPD78P083GB(A)-3BS-MTX[Note]	44-pin plastic QFP (10 × 10 mm)	One-Time PROM

Note Under planning

Caution **μPD78P083GB(A) has two types of packages. (Refer to Chapter 7. PACKAGE DRAWINGS). Consult an NEC's sales representative for suppliable packages.**

QUALITY GRADE

Part Number	Package	Quality Grades
μPD78P083CU(A)	42-pin plastic shrink DIP (600 mil)	Special
μPD78P083GB(A)-3B4	44-pin plastic QFP (10 × 10 mm)	Special
μPD78P083GB(A)-3BS-MTX[Note]	44-pin plastic QFP (10 × 10 mm)	Special

Note Under planning

Please refer to "Quality grades on NEC Semiconductor Devices" (Document number C11531E) published by NEC Corporation to know the specification of quality grade on the devices and its recommended applications.

Deferences between μPD78P083(A) and μPD78P083

Product / Item	μPD78P083(A)	μPD78P083
Quality Grade	Special	Standard
Package	42-pin plastic shrink DIP (600 mil) 44-pin plastic QFP (10 × 10 mm)	42-pin plastic shrink DIP (600 mil) 44-pin plastic QFP (10 × 10 mm) 42-pin ceramic shrink DIP (with window) (600 mil)

78K/0 SERIES DEVELOPMENT

The following shows the 78K/0 Series products development. Subseries names are shown inside frames.

Mass-produced products

Products under development

Y Subseries supports the I^2C bus specifications.

78K/0 series

Control

100-pin	μPD78075B	μPD78075BY	Low EMI noise version of the μPD78078
100-pin	μPD78078	μPD78078Y	Timer is added to the μPD78054 and its external interface is enhanced.
100-pin	μPD78070A	μPD78070AY	ROM-less versions of the μPD78078
100-pin	μPD780018[Note]	μPD780018Y[Note]	Serial I/O of the μPD78078 is enhanced and only selected functions are provided.
80-pin	μPD780058	μPD780058Y[Note]	Serial I/O-enhanced versions of the μPD78054; Low EMI noise version
80-pin	μPD78058F	μPD78058FY	Low EMI noise version of the μPD78054
80-pin	μPD78054	μPD78054Y	UART and D/A converter are added to the μPD78014 and I/O is enhanced.
64-pin	μPD780034	μPD780034Y	A/D-enhanced version of the μPD780024
64-pin	μPD780024	μPD780024Y	Serial I/O-enhanced versions of the μPD78018F; Low EMI noise version
64-pin	μPD78014H		Low EMI noise version of the μPD78018F
64-pin	μPD78018F	μPD78018FY	Low-voltage (1.8 V) operation versions of the μPD78014 with several ROM and RAM capacities available.
64-pin	μPD78014	μPD78014Y	A/D converter and 16-bit timer are added to the μPD78002.
64-pin	μPD780001		A/D converter is added to the μPD78002.
64-pin	μPD78002	μPD78002Y	Basic subseries for control applications
42/44-pin	μPD78083		On-chip UART, and operable at low voltage (1.8 V).

Inverter control

64-pin	μPD780964		A/D-enhanced version of the μPD780924
64-pin	μPD780924		On-chip inverter control circuit and UART incorporated; Low EMI noise version

FIP driving

100-pin	μPD780208		I/O and FIP C/D of the μPD78044F are enhanced. Total display outputs : 53 pins
100-pin	μPD780228		I/O and FIP C/D of the μPD78044H are enhanced. Total display outputs : 48 pins
80-pin	μPD78044H		N-ch open-drain I/O is added to the μPD78044F. Total display outputs : 34 pins
80-pin	μPD78044F		Basic subseries for FIP driving. Total display outputs: 34 pins

LCD driving

100-pin	μPD780308	μPD780308Y	SIO of the μPD78064 is enhanced, and ROM and RAM are expanded.
100-pin	μPD78064B		Low EMI noise version of the μPD78064
100-pin	μPD78064	μPD78064Y	Basic subseries for driving LCDs and with on-chip UART.

IEBus™ supported

80-pin	μPD78098		IEBus controller is added to the μPD78054.

LV

64-pin	μPD78P0914		PWM output, LV digital code decoder and Hsync counter are incorporated.

Note Under planning

The following table shows the differences among subseries functions.

Subseries name \ Function		ROM capacity	Timer 8-bit	Timer 16-bit	Timer Watch	Timer WDT	8-bit A/D	10-bit A/D	8-bit D/A	Serial interface	I/O	V_{DD} MIN. value	External expansion
Control	μPD78075B	32K to 40K	4 ch	1 ch	1 ch	1 ch	8 ch	—	2 ch	3 ch (UART: 1 ch)	88	1.8 V	Available
	μPD78078	48K to 60K											
	μPD78070A	—									61	2.7 V	
	μPD780018	48K to 60K							—	2 ch (Time division 3-wire: 1 ch)	88		
	μPD780058	24K to 60K	2 ch						2 ch	3 ch (Time division UART: 1 ch)	68	1.8 V	
	μPD78058F	48K to 60K								3 ch (UART: 1 ch)	69	2.7 V	
	μPD78054	16K to 60K										2.0 V	
	μPD780034	8K to 32K					—	8 ch	—	3 ch (UART: 1 ch, Time division 3-wire: 1 ch)	51	1.8 V	
	μPD780024						8 ch	—					
	μPD78014H									2 ch	53		
	μPD78018F	8K to 60K											
	μPD78014	8K to 32K										2.7 V	
	μPD780001	8K		—	—					1 ch	39		—
	μPD78002	8K to 16K			1 ch		—				53		Available
	μPD78083	—			—		8 ch			1 ch (UART: 1 ch)	33	1.8 V	—
Inverter control	μPD780964	8K to 32K	3 ch	**Note**	—	1 ch	—	8 ch	—	2 ch (UART: 2 ch)	47	2.7 V	Available
	μPD780924						8 ch	—					
FIP driving	μPD780208	32K to 60K	2 ch	1 ch	1 ch	1 ch	8 ch	—	—	2 ch	74	2.7 V	—
	μPD780228	48K to 60K	3 ch	—	—					1 ch	72	4.5 V	
	μPD78044H	32K to 48K	2 ch	1 ch	1 ch						68	2.7 V	
	μPD78044F	16K to 40K								2 ch			
LCD driving	μPD780308	48K to 60K	2 ch	1 ch	1 ch	1 ch	8 ch	—	—	3 ch (Time division UART: 1 ch)	57	2.0 V	—
	μPD78064B	32K								2 ch (UART: 1 ch)			
	μPD78064	16K to 32K											
IEBus supported	μPD78098	32K to 60K	2 ch	1 ch	1 ch	1 ch	8 ch	—	2 ch	3 ch (UART: 1 ch)	69	2.7 V	Available
LV	μPD78P0914	32K	6 ch	—	—	1 ch	8 ch	—	—	2 ch	54	4.5 V	Available

Note 10 bits timer: 1 channel

FUNCTION DESCRIPTION

Item		Function
Internal memory		• PROM: 24 Kbytes Note • RAM High-speed RAM: 512 bytes Note
Memory space		64 Kbytes
General register		8 bits x 32 registers (8 bits x 8 registers x 4 banks)
Instruction cycles		Instruction execution time variable function is integrated. 0.4 μs/0.8 μs/1.6 μs/3.2 μs/6.4 μs/12.8 μs (@5.0-MHz operation with main system clock)
Instruction set		• 16-bit operation • Multiply/divide (8 bits x 8 bits, 16 bits ÷ 8 bits) • Bit manipulation (set, reset, test, Boolean operation) • BCD adjust, etc.
I/O ports		Total : 33 • CMOS input : 1 • CMOS input/output : 32
A/D converter		• 8-bit resolution x 8 channels
Serial interface		• 3-wired serial I/O/UART mode selectable: 1 channel
Timer		• 8-bit timer/event counter: 2 channels • Watchdog timer: 1 channel
Timer output		2 pins (8-bit PWM output enable)
Clock output		19.5 kHz, 39.1 kHz, 78.1 kHz, 156 kHz, 313 kHz, 625 kHz, 1.25 MHz, 2.5 MHz, and 5.0 MHz (@ 5.0-MHz operation with main system clock)
Buzzer output		1.2 kHz, 2.4 kHz, 4.9 kHz, and 9.8 kHz (@ 5.0-MHz operation with main system clock)
Vectored-interrupt source	Maskable	Internal : 8 external : 3
	Non-maskable	Internal : 1
	Software	Internal : 1
Power supply voltage		V_{DD} = 1.8 to 5.5 V
Operating ambient temperature		T_A = –40 to +85°C
Packages		• 42-pin plastic shrink DIP (600 mil) • 44-pin plastic QFP (10 × 10 mm)

Note Internal PROM and high-speed RAM capacities can be changed by setting the memory size switching register (IMS).

PIN CONFIGURATIONS (Top View)

(1) Normal operating mode

- 42-pin plastic shrink DIP (600 mil)
  μPD78P083CU(A)

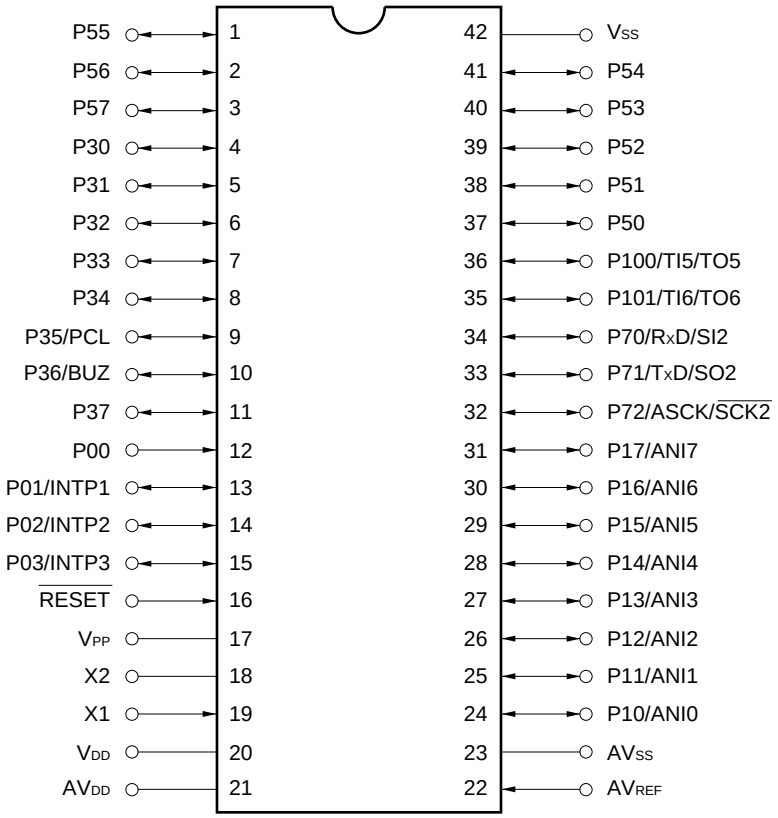

Cautions 1. Connect V_{PP} pin directly to V_{SS}.
2. Connect AV_{DD} pin to V_{DD}.
3. Connect AV_{SS} pin to V_{SS}.

- 44-pin plastic QFP (10 x 10 mm)
  μPD78P083GB(A)-3B4, μPD78P083GB(A)-3BS-MTX[Note]

Note Under planning

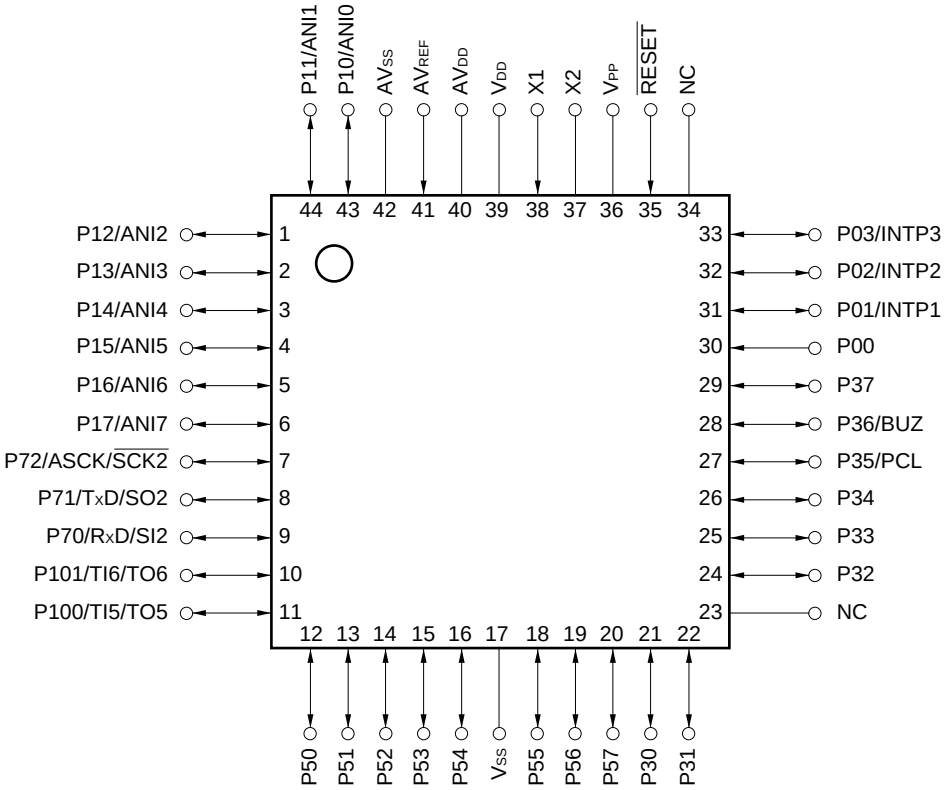

Cautions 1. Connect V_{PP} pin directly to V_{SS}.

2. Connect AV_{DD} pin to V_{DD}.

3. Connect AV_{SS} pin to V_{SS}.

4. Connect NC pin to V_{SS} for noise protection (It can be left open).

ANI0 to ANI7	: Analog Input	PCL	: Programmable Clock
ASCK	: Asynchronous Serial Clock	$\overline{\text{RESET}}$	: Reset
AV_{DD}	: Analog Power Supply	R_XD	: Receive Data
AV_{REF}	: Analog Reference Voltage	$\overline{\text{SCK2}}$	: Serial Clock
AV_{SS}	: Analog Ground	SI2	: Serial Input
BUZ	: Buzzer Clock	SO2	: Serial Output
INTP1 to INTP3	: Interrupt from Peripherals	TI5, TI6	: Timer Input
NC	: Non-connection	TO5, TO6	: Timer Output
P00 to P03	: Port 0	T_XD	: Transmit Data
P10 to P17	: Port 1	V_{DD}	: Power Supply
P30 to P37	: Port 3	V_{PP}	: Programming Power Supply
P50 to P57	: Port 5	V_{SS}	: Ground
P70 to P72	: Port 7	X1, X2	: Crystal (Main System Clock)
P100, P101	: Port 10		

(2) PROM programming mode

- 42-pin plastic shrink DIP (600 mil)
  μPD78P083CU(A)

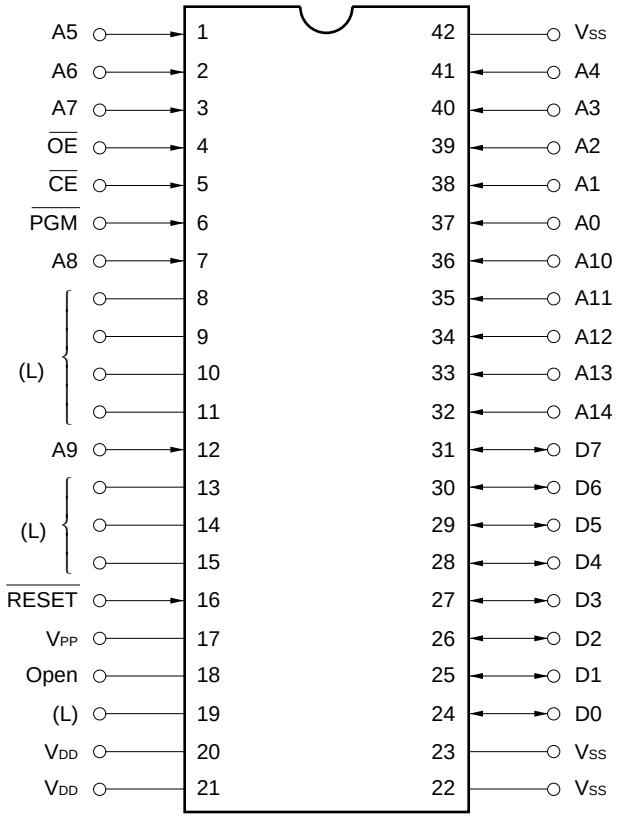

Cautions 1. (L): Individually connect to V_{SS} via a pull-down resistor.
2. V_{SS}: Connect to GND.
3. $\overline{RESET}$: Set to low level.
4. Open: Leave open.

- 44-pin plastic QFP (10 x 10 mm)
  μPD78P083GB(A)-3B4, μPD78P083GB(A)-3BS-MTX[Note]

Note Under planning

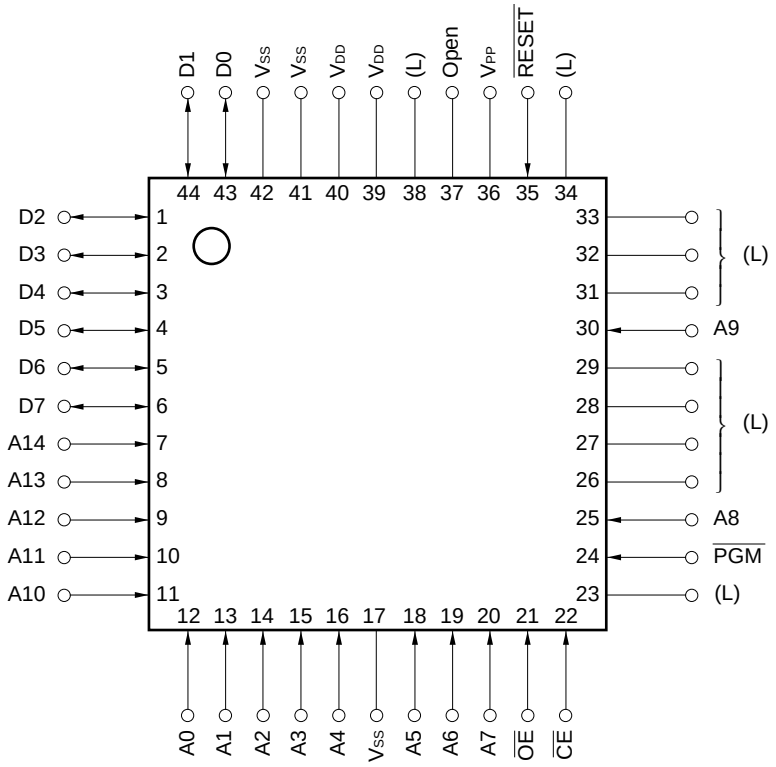

Cautions 1. (L): Individually connect to V_{SS} via a pull-down resistor.
2. V_{SS}: Connect to GND.
3. $\overline{RESET}$: Set to low level.
4. Open: Leave open.

A0 to A14	: Address Bus	$\overline{RESET}$	: Reset
$\overline{CE}$	: Chip Enable	V_{DD}	: Power Supply
D0 to D7	: Data Bus	V_{PP}	: Programming Power Supply
$\overline{OE}$	: Output Enable	V_{SS}	: Ground
$\overline{PGM}$	: Program		

BLOCK DIAGRAM

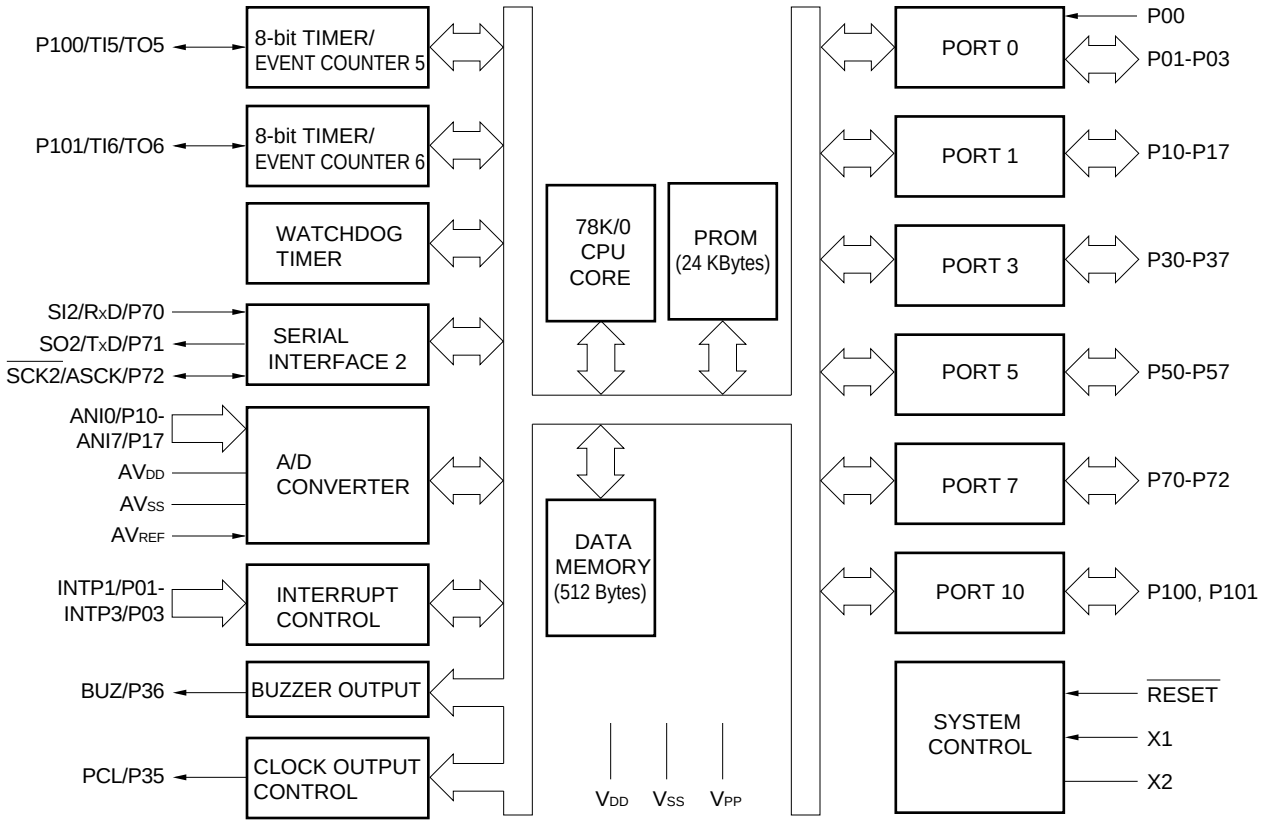

CONTENTS

1. DIFFERENCES BETWEEN THE μPD78P083(A) AND MASK ROM VERSIONS

The μPD78P083(A) is a single-chip microcontroller with an on-chip one-time PROM.

Setting the memory size switching register (IMS) makes the functions except the PROM specification identical to the mask ROM versions.

Table 1-1 shows differences between the PROM version (μPD78P083(A)) and mask ROM versions (μPD78081(A) and μPD78082(A)).

Table 1-1. Differences between the μPD78P083(A) and Mask ROM Versions

Parameter	μPD78P083(A)	Mask ROM Versions
Internal ROM type	One-time PROM/EPROM	Mask ROM
Internal ROM capacity	24 Kbytes	μPD78081(A) : 8 Kbytes μPD78082(A) : 16 Kbytes
Internal high-speed RAM capacity	512 bytes	μPD78081(A) : 256 bytes μPD78082(A) : 384 bytes
Internal ROM and internal high-speed RAM capacity change by memory size switching register (IMS)	Enable Note	Disable
IC pin	No	Yes
V_{PP} pin	Yes	No
Electrical specifications	Refer to a data sheet of each product	

Note The internal PROM becomes 24 Kbytes and the internal high-speed RAM becomes 512 bytes by the $\overline{\text{RESET}}$ input.

2. PIN FUNCTIONS

2.1 Pins in Normal Operating Mode

(1) Port pins

Pin Name	Input/Output	Function		After Reset	Alternate Function
P00	Input	Port 0 4-bit input/output port	Input only	Input	—
P01	Input/output		Input/output is specifiable bit-wise. When used as the input port, it is possible to connect a pull-up resistor by software.	Input	INTP1
P02					INTP2
P03					INTP3
P10 to P17	Input/output	Port 1 8-bit input/output port Input/output is specifiable bit-wise. When used as the input port, it is possible to connect a pull-up resistor by software. Note		Input	ANI0 to ANI7
P30-P34	Input/output	Port 3 8-bit input/output port Input/output is specifiable bit-wise. When used as the input port, it is possible to connect a pull-up resistor by software.		Input	—
P35					PCL
P36					BUZ
P37					—
P50 to P57	Input/output	Port 5 8-bit input/output port Can drive up to seven LEDs directly. Input/output is specifiable bit-wise. When used as the input port, it is possible to connect a pull-up resistor by software.		Input	—
P70	Input/output	Port 7 3-bit input/output port Input/output is specifiable bit-wise. When used as the input port, it is possible to connect a pull-up resistor by software.		Input	SI2/RxD
P71					SO2/TxD
P72					$\overline{\text{SCK2}}$/ASCK
P100	Input/output	Port 10 2-bit input/output port Input/output is specifiable bit-wise. When used as the input port, it is possible to connect a pull-up resistor by software.		Input	TI5/TO5
P101					TI6/TO6

Note When P10/ANI0-P17/ANI7 pins are used as the analog inputs for the A/D converter, set the port 1 to the input mode. The on-chip pull-up resistor is automatically disabled.

(2) Non-port pins

Pin Name	Input/Output	Function	After Reset	Alternate Function
INTP1	Input	External interrupt input by which the active edge (rising edge, falling edge, or both rising and falling edges) can be specified.	Input	P01
INTP2				P02
INTP3				P03
SI2	Input	Serial interface serial data input.	Input	P70/RxD
SO2	Output	Serial interface serial data output.	Input	P71/TxD
$\overline{SCK2}$	Input/Output	Serial interface serial clock input/output.	Input	P72/ASCK
RxD	Input	Asynchronous serial interface serial data input.	Input	P70/SI2
TxD	Output	Asynchronous serial interface serial data output.	Input	P71/SO2
ASCK	Input	Asynchronous serial interface serial clock input.	Input	P72/$\overline{SCK2}$
TI5	Input	External count clock input to 8-bit timer (TM5).	Input	P100/TO5
TI6		External count clock input to 8-bit timer (TM6).		P101/TO6
TO5	Output	8-bit timer output.	Input	P100/TI5
TO6				P101/TI6
PCL	Output	Clock output. (for main system clock trimming)	Input	P35
BUZ	Output	Buzzer output.	Input	P36
ANI0 to ANI7	Input	A/D converter analog input.	Input	P10 to P17
AV_{REF}	Input	A/D converter reference voltage input.	–	–
AV_{DD}	–	A/D converter analog power supply. Connected to V_{DD}.	–	–
AV_{SS}	–	A/D converter ground potential. Connected to V_{SS}.	–	–
$\overline{RESET}$	Input	System reset input.	–	–
X1	Input	Main system clock oscillation crystal connection.	–	–
X2	–		–	–
V_{DD}	–	Positive power supply.	–	–
V_{PP}	–	High-voltage applied during program write/verification. Connected directly to V_{SS} in normal operating mode.	–	–
V_{SS}	–	Ground potential.	–	–
NC	–	Does not internally connected. Connect to V_{SS}. (It can be left open)	–	–

2.2 Pins in PROM Programming Mode

Pin Name	Input/Output	Function
$\overline{\text{RESET}}$	Input	PROM programming mode setting When +5 V or +12.5 V is applied to the V_{PP} pin and a low-level signal is applied to the $\overline{\text{RESET}}$ pin, this chip is set in the PROM programming mode.
V_{PP}	Input	PROM programming mode setting and high-voltage applied during program write/verification.
A0 to A14	Input	Address bus
D0-D7	Input/output	Data bus
$\overline{\text{CE}}$	Input	PROM enable input/program pulse input
$\overline{\text{OE}}$	Input	Read strobe input to PROM
$\overline{\text{PGM}}$	Input	Program/program inhibit input in PROM programming mode.
V_{DD}	—	Positive power supply
V_{SS}	—	Ground potential

2.3 Pin Input/Output Circuits and Recommended Connection of Unused Pins

Types of input/output circuits of the pins and recommeded connection of unused pins are shown in Table 2-1. For the configuration of each type of input/output circuit, see Figure 2-1.

Table 2-1. Type of Input/Output Circuit of Each Pin

Pin Name	Input/Output Circuit Type	Input/Output	Recommended Connection for Unused Pins
P00	2	Input	Connect to V_{SS}.
P01/INTP1	8-A	Input/Output	Independently connect to V_{SS} via a resistor.
P02/INTP2			
P03/INTP3			
P10/ANI0 to P17/ANI7	11	Input/Output	Independently connect to V_{DD} or V_{SS} via a resistor.
P30 to P32	5-A		
P33, P34	8-A		
P35/PCL	5-A		
P36/BUZ			
P37			
P50 to P57	5-A		
P70/SI2/RxD	8-A		
P71/SO2/TxD	5-A		
P72/$\overline{\text{SCK2}}$/ASCK	8-A		
P100/TI5/TO5	8-A		
P101/TI6/TO6			
$\overline{\text{RESET}}$	2	Input	–
AV_{REF}	–	–	Connect to V_{SS}.
AV_{DD}			Connect to V_{DD}.
AV_{SS}			Connect to V_{SS}.
V_{PP}			Connect directly to V_{SS}.
NC			Connect to V_{SS} (can leave open)

Figure 2-1. Types of Pin Input/Output Circuits

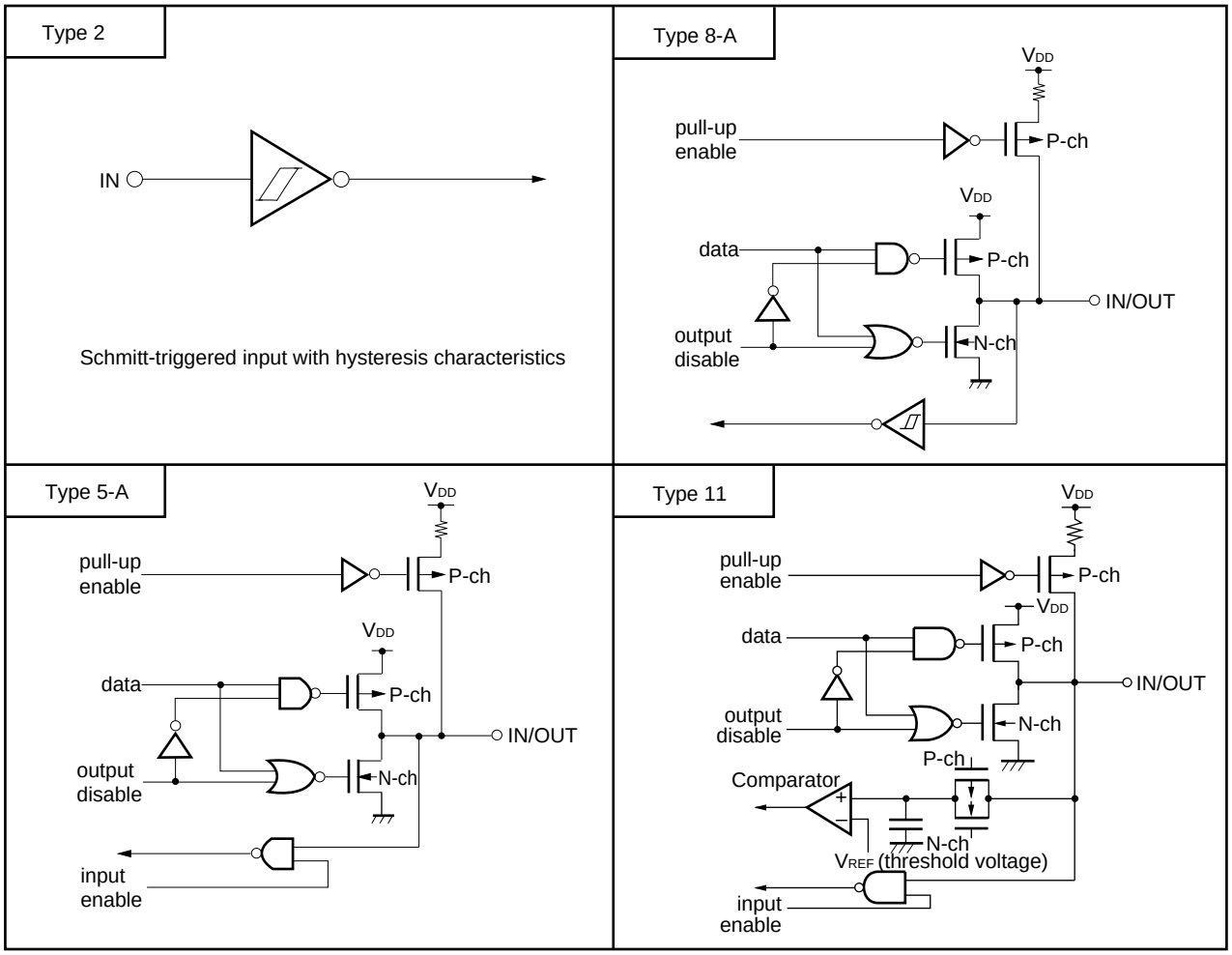

3. INTERNAL MEMORY SIZE SWITCHING REGISTER (IMS)

This is a register to disable use of part of internal memories by software. By setting this memory size switching register (IMS), it is possible to get the same memory mapping as that of the mask ROM versions with a different internal memory (ROM, RAM).

IMS is set with an 8-bit memory manipulation instruction.

$\overline{\text{RESET}}$ input sets IMS to 46H.

Figure 3-1. Internal Memory Size Switching Register Format

Symbol	7	6	5	4	3	2	1	0	Address	After Reset	R/W
IMS	RAM2	RAM1	RAM0	0	ROM3	ROM2	ROM1	ROM0	FFF0H	46H	R/W

ROM3	ROM2	ROM1	ROM0	Selection of Internal ROM Capacity
0	0	1	0	8 Kbytes
0	1	0	0	16 Kbytes
0	1	1	0	24 Kbytes
Other than above				Setting prohibited

RAM2	RAM1	RAM0	Selection of Internal High-Speed RAM Capacity
0	1	0	512 bytes
0	1	1	384 bytes
1	0	0	256 bytes
Other than above			Setting prohibited

Table 3-1 shows the setting values of IMS which make the memory mapping the same as that of the mask ROM version.

Table 3-1. Internal Memory Size Switching Register Setting Values

Target Mask ROM Versions	IMS Setting Value
μPD78081(A)	82H
μPD78082(A)	64H

4. PROM PROGRAMMING

The μPD78P083(A) has an internal 24-Kbyte PROM as a program memory. For programming, set the PROM programming mode with the V_{PP} and $\overline{RESET}$ pins. For the connection of unused pins, refer to **"PIN CONFIGURATIONS (TOP VIEW) (2) PROM programming mode."**

Caution Programs must be written in addresses 0000H to 5FFFH (The last address 5FFFH must be specified). They cannot be written by a PROM programmer which cannot specify the write address.

4.1 Operating Modes

When +5 V or +12.5 V is applied to the V_{PP} pin and a low-level signal is applied to the $\overline{RESET}$ pin, the PROM programming mode is set. This mode will become the operating mode as shown in Table 4-1 when the $\overline{CE}$, $\overline{OE}$, and $\overline{PGM}$ pins are set as shown.

Further, when the read mode is set, it is possible to read the contents of the PROM.

Table 4-1. Operating Modes of PROM Programming

Pin / Operating Mode	$\overline{RESET}$	V_{PP}	V_{DD}	$\overline{CE}$	$\overline{OE}$	$\overline{PGM}$	D0 to D7
Page data latch	L	+12.5 V	+6.5 V	H	L	H	Data input
Page write				H	H	L	High-impedance
Byte write				L	H	L	Data input
Program verify				L	L	H	Data output
Program inhibit				x	H	H	High-impedance
				x	L	L	
Read		+5 V	+5 V	L	L	H	Data output
Output disable				L	H	x	High-impedance
Standby				H	x	x	High-impedance

x : L or H

(1) Read mode

Read mode is set if $\overline{CE}$ = L, $\overline{OE}$ = L is set.

(2) Output disable mode

Data output becomes high-impedance, and is in the output disable mode, if $\overline{OE}$ = H is set.
Therefore, it allows data to be read from any device by controlling the $\overline{OE}$ pin, if multiple μPD78P083(A)s are connected to the data bus.

(3) Standby mode

Standby mode is set if $\overline{CE}$ = H is set.
In this mode, data outputs become high-impedance irrespective of the $\overline{OE}$ status.

(4) Page data latch mode

Page data latch mode is set if $\overline{CE}$ = H, $\overline{PGM}$ = H, $\overline{OE}$ = L are set at the beginning of page write mode.
In this mode, 1 page 4-byte data is latched in an internal address/data latch circuit.

(5) Page write mode

After 1 page 4 bytes of addresses and data are latched in the page data latch mode, a page write is executed by applying a 0.1-ms program pulse (active low) to the $\overline{PGM}$ pin with $\overline{CE}$ = H, $\overline{OE}$ = H. Then, program verification can be performed, if $\overline{CE}$ = L, $\overline{OE}$ = L are set.
If programming is not performed by a one-time program pulse, X times ($X \leq 10$) write and verification operations should be executed repeatedly.

(6) Byte write mode

Byte write is executed when a 0.1-ms program pulse (active low) is applied to the $\overline{PGM}$ pin with $\overline{CE}$ = L, $\overline{OE}$ = H. Then, program verification can be performed if $\overline{OE}$ = L is set.
If programming is not performed by a one-time program pulse, X times ($X \leq 10$) write and verification operations should be executed repeatedly.

(7) Program verify mode

Program verify mode is set if $\overline{CE}$ = L, $\overline{PGM}$ = H, $\overline{OE}$ = L are set.
In this mode, check if a write operation is performed correctly after the write.

(8) Program inhibit mode

Program inhibit mode is used when the $\overline{OE}$ pin, V_{PP} pin, and D0-D7 pins of multiple μPD78P083(A)s are connected in parallel and a write is performed to one of those devices.
When a write operation is performed, the page write mode or byte write mode described above is used. At this time, a write is not performed to a device which has the $\overline{PGM}$ pin driven high.

4.2 PROM Write Procedure

Figure 4-1. Page Program Mode Flow Chart

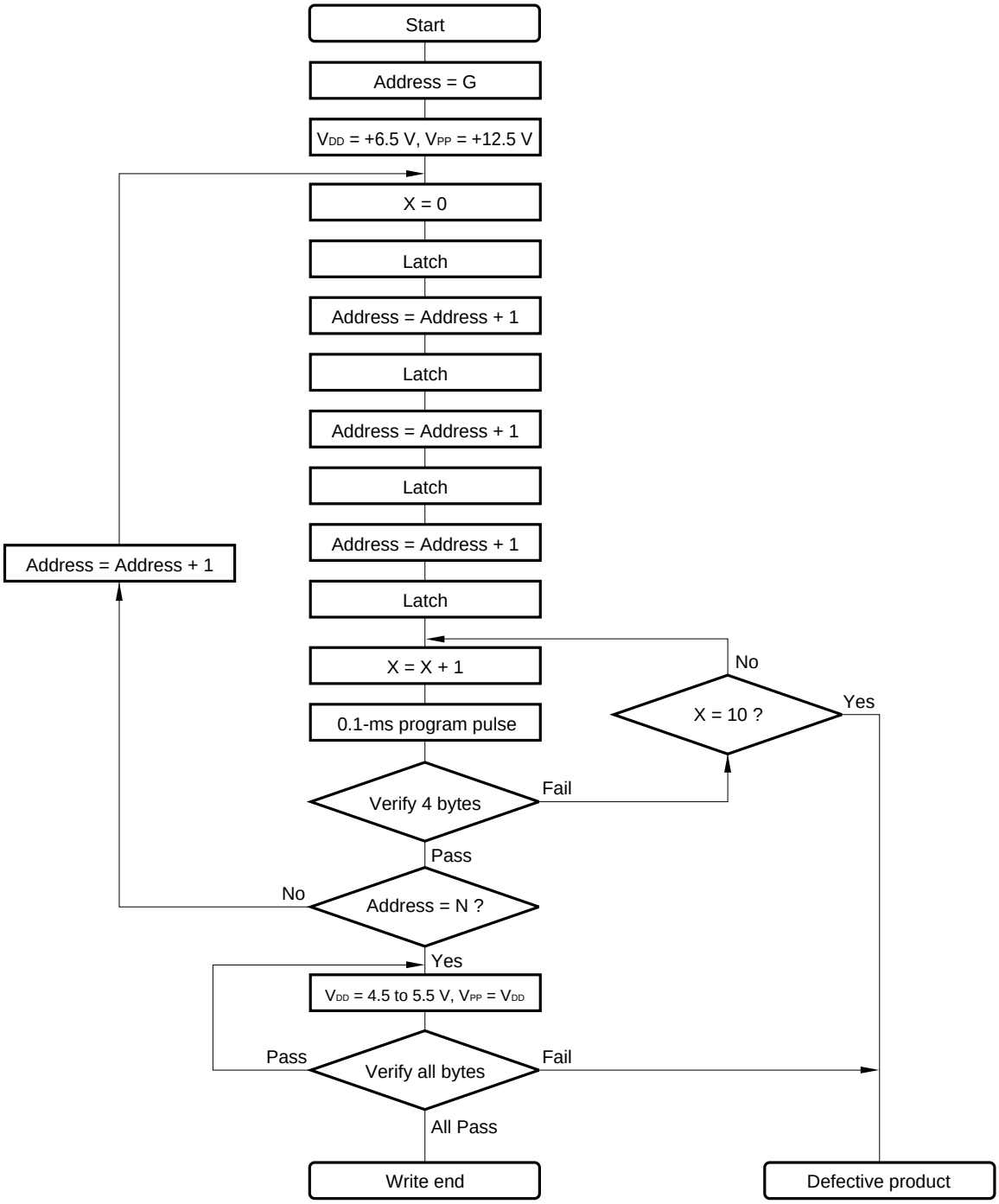

G = Start address

N = Program last address

Figure 4-2. Page Program Mode Timing

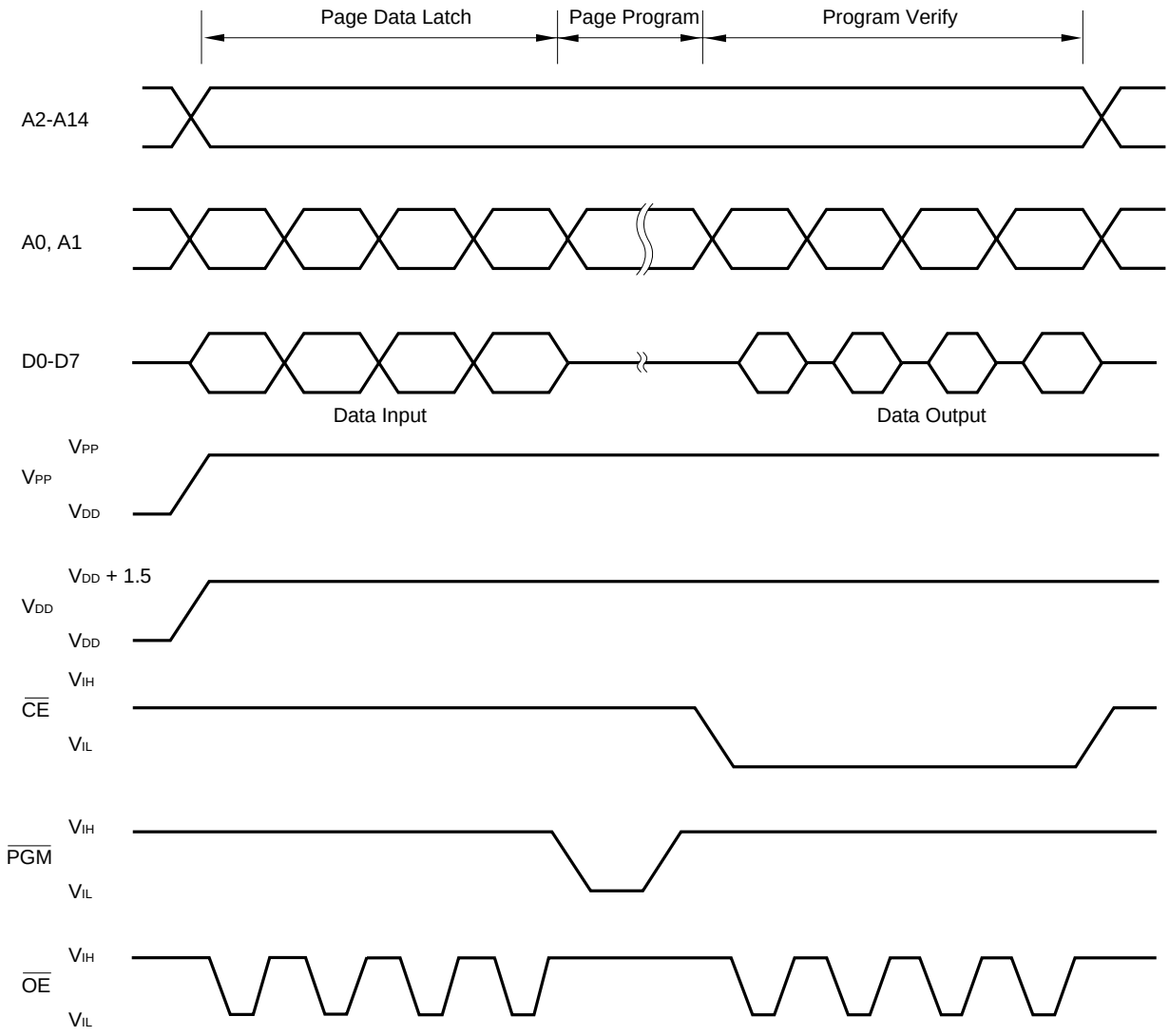

Figure 4-3. Byte Program Mode Flow Chart

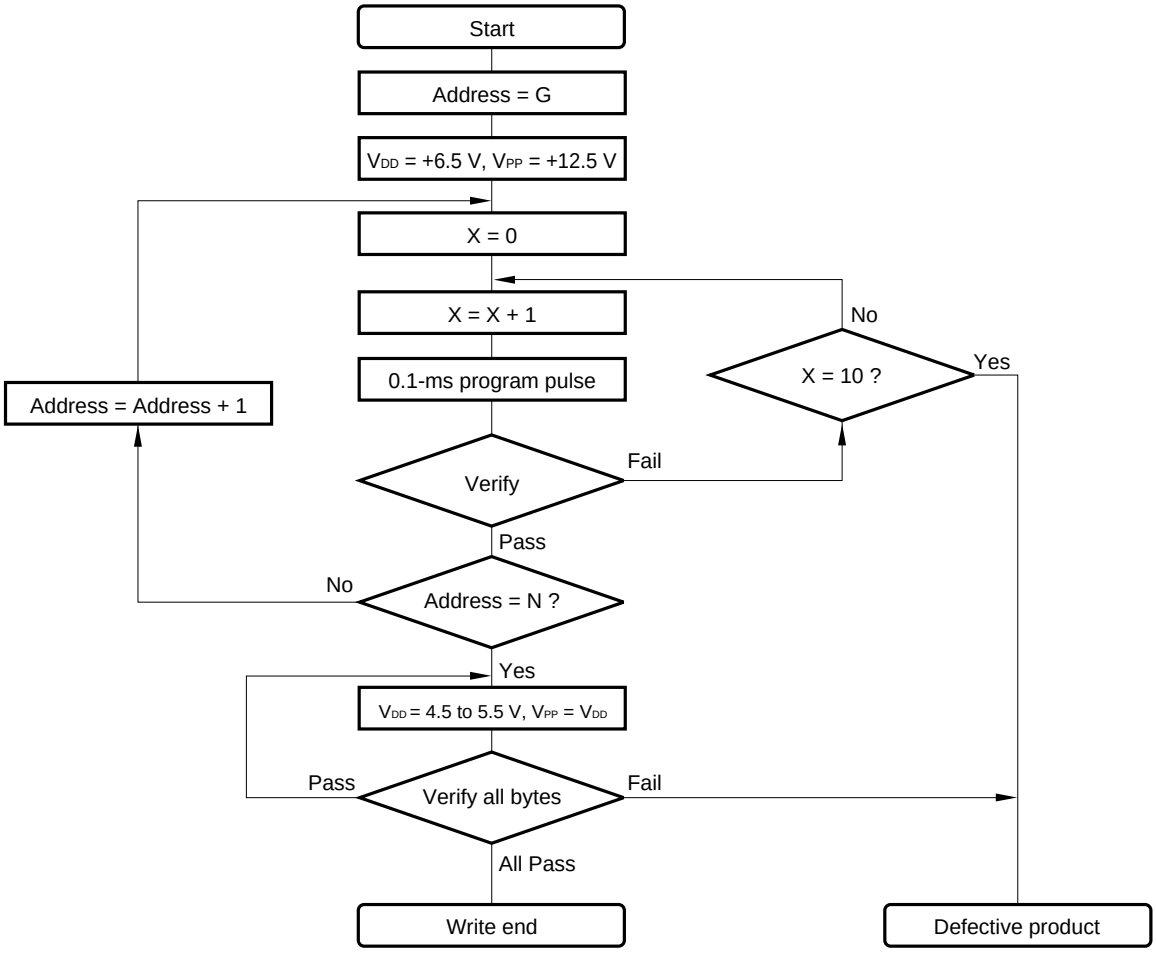

G = Start address

N = Program last address

Figure 4-4. Byte Program Mode Timing

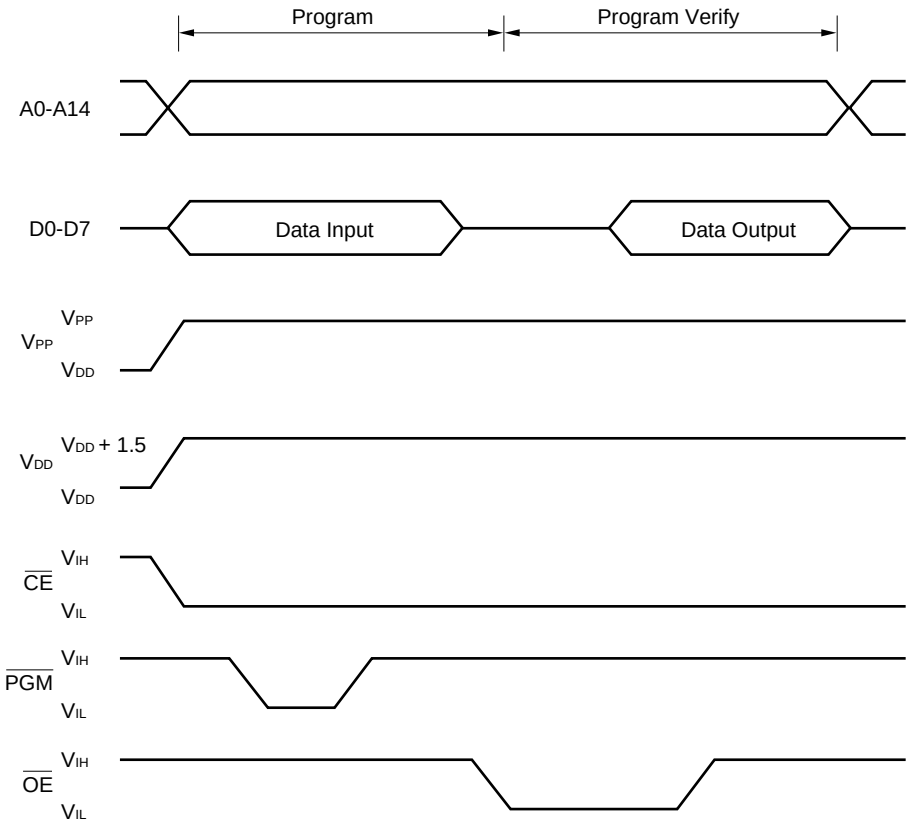

Cautions 1. V_{DD} should be applied before V_{PP} and removed after V_{PP}.

2. V_{PP} must not exceed +13.5 V including overshoot.

3. Reliability may be adversely affected if removal/reinsertion is performed while +12.5 V is being applied to V_{PP}.

4.3 PROM Read Procedure

The contents of PROM are readable to the external data bus (D0-D7) according to the read procedure shown below.

(1) Fix the $\overline{\text{RESET}}$ pin at low level, supply +5 V to the V_{PP} pin, and connect all other unused pins as shown in **"PIN CONFIGURATIONS (TOP VIEW) (2) PROM programming mode".**
(2) Supply +5 V to the V_{DD} and V_{PP} pins.
(3) Input address of read data into the A0 to A14 pins.
(4) Read mode
(5) Output data to D0 to D7 pins.

The timings of the above steps (2) to (5) are shown in Figure 4-5.

Figure 4-5. PROM Read Timings

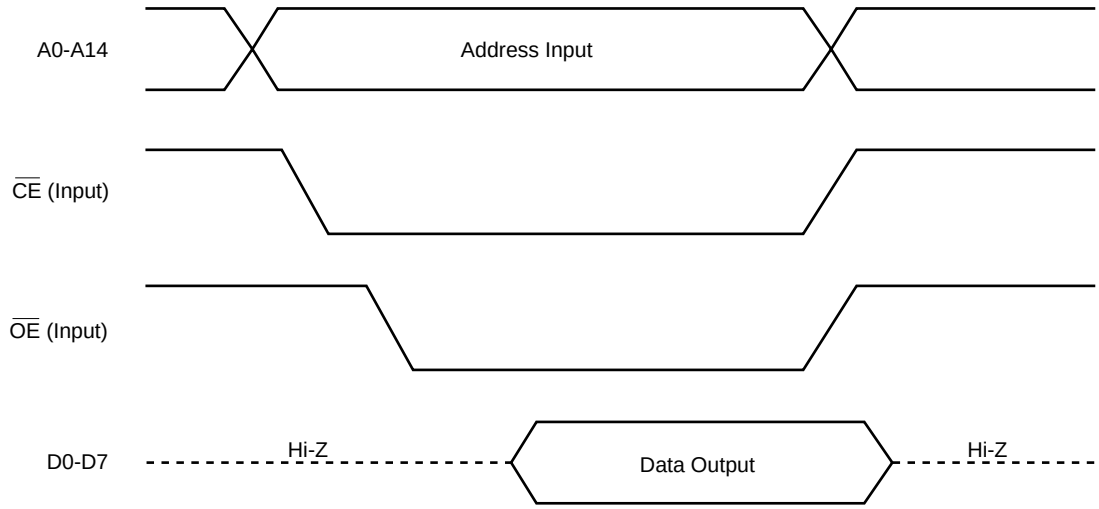

5. ONE-TIME PROM VERSION SCREENING

The one-time PROM version (μPD78P083CU(A), 78P083GB(A)-3B4, 78P083GB(A)-3BS-MTX[Note]) cannot be tested completely by NEC before it is shipped, because of its structure. It is recommended to perform screening to verify PROM after writing necessary data and performing high-temperature storage under the condition below.

Note Under planning

Storage Temperature	Storage Time
125°C	24 hours

NEC offers for an additional fee one-time PROM writing to marking, screening, and verify for products designated as QTOP Microcontroller. A fee-charged service for the μPD78P083(A) is under planning. Consult an NEC sales representative for details.

6. ELECTRICAL SPECIFICATIONS

Absolute Maximum Ratings (T_A = 25°C)

Parameter	Symbol	Test Conditions			Ratings	Unit
Supply voltage	V_{DD}				–0.3 to +7.0	V
	V_{PP}				–0.3 to +13.5	V
	AV_{DD}				–0.3 to V_{DD} + 0.3	V
	AV_{REF}				–0.3 to V_{DD} + 0.3	V
	AV_{SS}				–0.3 to +0.3	V
Input voltage	V_{I1}				–0.3 to V_{DD} + 0.3	
	V_{I2}	A9	PROM programming mode		–0.3 to +13.5	V
Output voltage	V_O				–0.3 to V_{DD} + 0.3	V
Analog input voltage	V_{AN}	P10 to P17	Analog input pins		AV_{SS} – 0.3 to AV_{REF} + 0.3	V
Output current, high	I_{OH}	Per pin			–10	mA
		Total for P10 to P17, P50 to P54, P70 to P72, P100, P101			–15	mA
		Total for P01 to P03, P30 to P37, P55 to P57			–15	mA
Output current, low	I_{OL} Note	Per pin		Peak value	30	mA
				r.m.s. value	15	mA
		Total for P50 to P54		Peak value	100	mA
				r.m.s. value	70	mA
		Total for P55 to P57		Peak value	100	mA
				r.m.s. value	70	mA
		Total for P10 to P17, P70 to P72, P100, P101		Peak value	50	mA
				r.m.s. value	20	mA
		Total for P01 to P03, P30 to P37		Peak value	50	mA
				r.m.s. value	20	mA
Operating ambient temperature	T_A				–40 to +85	°C
Storage temperature	T_{stg}				–65 to +150	°C

Note The r.m.s. value should be calculated as follows: [r.m.s. value] = [Peak value] $\times\sqrt{\text{Duty}}$

Caution **If the absolute maximum rating of even one of the above parameters is exceeded, the quality of the product may be degraded. The absolute maximum ratings are therefore the rated values that may, if exceeded, physically damage the product. Be sure to use the product with all the absolute maximum ratings observed.**

Remark Unless otherwise specified, dual-function pin characteristics are the same as port pin characteristics.

Capacitance (T_A = 25°C, V_{DD} = V_{SS} = 0 V)

Parameter	Symbol	Test Conditions		MIN.	TYP.	MAX.	Unit
Input capacitance	C_{IN}	f = 1 MHz, Unmeasured pins returned to 0 V.				15	pF
I/O capacitance	C_{IO}	f = 1 MHz, Unmeasured pins returned to 0 V.	P01 to P03, P10 to P17, P30 to P37, P50 to P57, P70 to P72, P100, P101			15	pF

Remark Unless otherwise specified, dual-function pin characteristics are the same as port pin characteristics.

Main System Clock Oscillator Characteristics (T_A = –40 to +85°C, V_{DD} = 1.8 to 5.5 V)

Resonator	Recommended Circuit	Parameter	Test Conditions	MIN.	TYP.	MAX.	Unit
Ceramic resonator	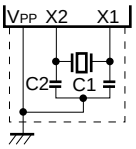	Oscillation frequency (fX) Note 1	V_{DD} = Oscillation voltage range	1.0		5.0	MHz
		Oscillation stabilization time Note 2	After V_{DD} came to MIN. of oscillation voltage range			4	ms
Crystal resonator	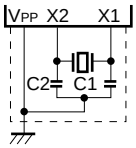	Oscillation frequency (fX) Note 1		1.0		5.0	MHz
		Oscillation stabilization time Note 2	V_{DD} = 4.5 to 5.5 V			10	ms
						30	
External clock	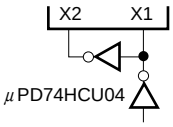	X1 input frequency (fX) Note 1		1.0		5.0	MHz
		X1 input high- and low-level widths (t_{XH}, t_{XL})		85		500	ns

Notes 1. Only the oscillator characteristics are shown. For the instruction execution time, refer to **AC Characteristics**.

2. Time required for oscillation to stabilize after a reset or the STOP mode has been released.

Caution When using the oscillation circuit of the main system clock, wire the portion enclosed in broken lines in the figures as follows to avoid adverse influences on the wiring capacitance:

- **Keep the wiring length as short as possible.**
- **Do not cross the wiring over other signal lines.**
- **Do not route the wiring in the vicinity of lines through which a high fluctuating current flows.**
- **Always keep the ground point of the capacitor of the oscillation circuit at the same potential as V_{SS}.**
- **Do not connect the power source pattern through which a high current flows.**
- **Do not extract signals from the oscillation circuit.**

DC Characteristics (T_A = –40 to +85°C, V_{DD} = 1.8 to 5.5 V)

Parameter	Symbol	Test Conditions		MIN.	TYP.	MAX.	Unit
Input voltage, high	V_{IH1}	P10 to P17, P30 to P32, P35 to P37, P50 to P57, P71	V_{DD} = 2.7 to 5.5 V	0.7V_{DD}		V_{DD}	V
				0.8V_{DD}		V_{DD}	V
	V_{IH2}	P00 to P03, P33, P34, P70, P72, P100, P101, $\overline{RESET}$	V_{DD} = 2.7 to 5.5 V	0.8V_{DD}		V_{DD}	V
				0.85V_{DD}		V_{DD}	V
	V_{IH3}	X1, X2	V_{DD} = 2.7 to 5.5 V	V_{DD} – 0.5		V_{DD}	V
				V_{DD} – 0.2		V_{DD}	V
Input voltage, low	V_{IL1}	P10 to P17, P30 to P32, P35 to P37, P50 to P57, P71	V_{DD} = 2.7 to 5.5 V	0		0.3V_{DD}	V
				0		0.2V_{DD}	V
	V_{IL2}	P00 to P03, P33, P34, P70, P72, P100, P101, $\overline{RESET}$	V_{DD} = 2.7 to 5.5 V	0		0.2V_{DD}	V
				0		0.15V_{DD}	V
	V_{IL3}	X1, X2	V_{DD} = 2.7 to 5.5 V	0		0.4	V
				0		0.2	V
Output voltage, high	V_{OH}	V_{DD} = 4.5 to 5.5 V, I_{OH} = –1 mA		V_{DD} – 1.0			V
		I_{OH} = –100 μA		V_{DD} – 0.5			V
Output voltage, low	V_{OL}	P50 to P57	V_{DD} = 2.0 to 4.5 V, I_{OL} = 10 mA			0.8	V
			V_{DD} = 4.5 to 5.5 V, I_{OL} = 15 mA		0.4	2.0	V
		P01 to P03, P10 to P17, P30 to P37, P70 to P72, P100, P101	V_{DD} = 4.5 to 5.5 V, I_{OL} = 1.6 mA			0.4	V
			I_{OL} = 400 μA			0.5	V
Input-leak current, high	I_{LIH1}	V_{IN} = V_{DD}	P00 to P03, P10 to P17, P30 to P37, P50 to P57, P70 to P72, P100, P101, $\overline{RESET}$			3	μA
	I_{LIH2}		X1, X2			20	μA
Input-leak current, low	I_{LIL1}	V_{IN} = 0 V	P00 to P03, P10 to P17, P30 to P37, P50 to P57, P70 to P72, P100, P101, $\overline{RESET}$			–3	μA
	I_{LIL2}		X1, X2			–20	μA
Output leak current, high	I_{LOH}	V_{OUT} = V_{DD}				3	μA
Output leak current, low	I_{LOL}	V_{OUT} = 0 V				–3	μA
Software pull-up resistor	R	V_{IN} = 0 V	P01 to P03, P10 to P17, P30 to P37, P50 to P57, P70 to P72, P100, P101	15	40	90	kΩ

Remark Unless otherwise specified, dual-function pin characteristics are the same as port pin characteristics.

DC Characteristics (T_A = –40 to +85°C, V_{DD} = 1.8 to 5.5 V)

Parameter	Symbol	Test Conditions		MIN.	TYP.	MAX.	Unit
Supply current Note 1	I_{DD1}	5.0-MHz crystal oscillation operating mode (f_{XX} = 2.5 MHz) Note 2	V_{DD} = 5.0 V ± 10% Note 4		5.4	16.2	mA
			V_{DD} = 3.0 V ± 10% Note 5		0.8	2.4	mA
			V_{DD} = 2.0 V ± 10% Note 5		0.45	1.35	mA
		5.0-MHz crystal oscillation operating mode (f_{XX} = 5.0 MHz) Note 3	V_{DD} = 5.0 V ± 10% Note 4		9.5	28.5	mA
			V_{DD} = 3.0 V ± 10% Note 5		1.0	3.0	mA
	I_{DD2}	5.0-MHz crystal oscillation HALT mode (f_{XX} = 2.5 MHz) Note 2	V_{DD} = 5.0 V ± 10%		1.4	4.2	mA
			V_{DD} = 3.0 V ± 10%		0.5	1.5	mA
			V_{DD} = 2.0 V ± 10%		280	840	μA
		5.0-MHz crystal oscillation HALT mode (f_{XX} = 5.0 MHz) Note 3	V_{DD} = 5.0 V ± 10%		1.6	4.8	mA
			V_{DD} = 3.0 V ± 10%		0.65	1.95	mA
	I_{DD3}	STOP mode	V_{DD} = 5.0 V ± 10%		0.1	30	μA
			V_{DD} = 3.0 V ± 10%		0.05	10	μA
			V_{DD} = 2.0 V ± 10%		0.05	10	μA

Notes **1.** Not including AV_{REF}, AV_{DD} currents or port currents (including current flowing into internal pull-up resistors).

2. f_{XX} = f_X/2 operation (when oscillation mode selection register (OSMS) is set to 00H).

3. f_{XX} = f_X operation (when oscillation mode selection register (OSMS) is set to 01H).

4. High-speed mode operation (when processor clock control register (PCC) is set to 00H).

5. Low-speed mode operation (when processor clock control register (PCC) is set to 04H).

Remark f_{XX}: Main system clock frequency (f_X or f_X/2)

f_X: Main system clock oscillation frequency

AC Characteristics

(1) Basic Operation (T_A = –40 to +85°C, V_{DD} = 1.8 to 5.5 V)

Parameter	Symbol	Test Conditions		MIN.	TYP.	MAX.	Unit
Cycle time (minimum instruction execution time)	T_{CY}	$f_{XX} = f_X/2$ Note1	V_{DD} = 2.7 to 5.5 V	0.8		64	μs
				2.0		64	μs
		$f_{XX} = f_X/$ Note2	3.5 V ≤ V_{DD} ≤ 5.5 V	0.4		32	μs
			2.7 V ≤ V_{DD} < 3.5 V	0.8		32	μs
TI5, TI6 input frequency	f_{TI}	V_{DD} = 4.5 to 5.5 V		0		4	MHz
				0		275	kHz
TI5, TI6 input high-/ low-level widths	t_{TIH}, t_{TIL}	V_{DD} = 4.5 to 5.5 V		100			ns
				1.8			μs
Interrupt input high-/ low-level widths	t_{INTH}, t_{INTL}	V_{DD} = 2.7 to 5.5 V		10			μs
				20			μs
$\overline{\text{RESET}}$ low-level width	t_{RSL}	V_{DD} = 2.7 to 5.5 V		10			μs
				20			μs

Notes 1. When oscillation mode selection register (OSMS) is set to 00H.
2. When OSMS is set to 01H.

Remark f_{XX}: Main system clock frequency (f_X or $f_X/2$)
f_X: Main system clock oscillation frequency

T_{CY} vs V_{DD}
(Main System Clock $f_{XX} = f_X/2$ Operation)

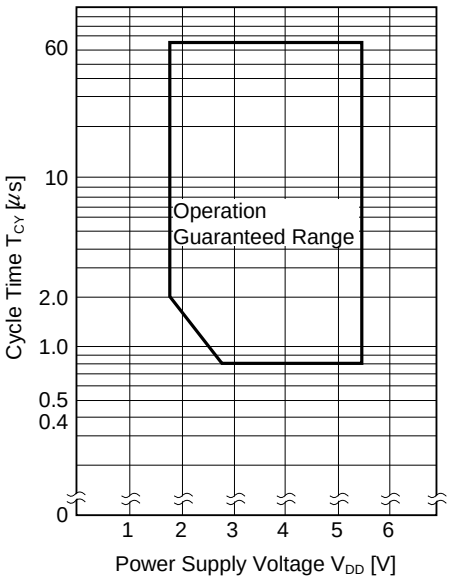

T_{CY} vs V_{DD}
(Main System Clock $f_{XX} = f_X$ Operation)

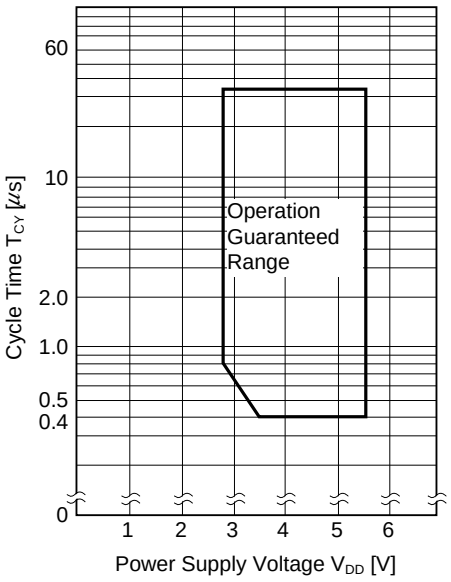

(2) Serial Interface (T_A = –40 to +85°C, V_{DD} = 1.8 to 5.5 V)

(a) 3-wired serial I/O mode ($\overline{SCK2}$ ··· internal clock output)

Parameter	Symbol	Test Conditions	MIN.	TYP.	MAX.	Unit
$\overline{SCK2}$ cycle time	t_{KCY1}	4.5 V ≤ V_{DD} ≤ 5.5 V	800			ns
		2.7 V ≤ V_{DD} < 4.5 V	1600			ns
		2.0 V ≤ V_{DD} < 2.7 V	3200			ns
			4800			ns
$\overline{SCK2}$ high-/low-level width	t_{KH1}, t_{KL1}	V_{DD} = 4.5 to 5.5 V	t_{KCY1}/2–50			ns
			t_{KCY1}/2–100			ns
SI2 setup time (to $\overline{SCK2}$ ↑)	t_{SIK1}	4.5 V ≤ V_{DD} ≤ 5.5 V	100			ns
		2.7 V ≤ V_{DD} < 4.5 V	150			ns
		2.0 V ≤ V_{DD} < 2.7 V	300			ns
			400			ns
SI2 hold time (from $\overline{SCK2}$ ↑)	t_{KSI1}		400			ns
$\overline{SCK2}$ ↓ → SO2 output delay time	t_{KSO1}	C = 100 pF[Note]			300	ns

Note C is the $\overline{SCK2}$, SO2 output line load capacitance.

(b) 3-wired serial I/O mode ($\overline{SCK2}$ ··· external clock input)

Parameter	Symbol	Test Conditions		MIN.	TYP.	MAX.	Unit
$\overline{SCK2}$ cycle time	t_{KCY2}	4.5 V ≤ V_{DD} ≤ 5.5 V		800			ns
		2.7 V ≤ V_{DD} < 4.5 V		1600			ns
		2.0 V ≤ V_{DD} < 2.7 V		3200			ns
				4800			ns
$\overline{SCK2}$ high-/low-level width	t_{KH2}, t_{KL2}	4.5 V ≤ V_{DD} ≤ 5.5 V		400			ns
		2.7 V ≤ V_{DD} < 4.5 V		800			ns
		2.0 V ≤ V_{DD} < 2.7 V		1600			ns
				2400			ns
SI2 setup time (to $\overline{SCK2}$ ↑)	t_{SIK2}	V_{DD} = 2.0 to 5.5 V		100			ns
				150			ns
SI2 hold time (from $\overline{SCK2}$ ↑)	t_{KSI2}			400			ns
$\overline{SCK2}$ ↓ → SO2 output delay time	t_{KSO2}	C = 100 pF[Note]	V_{DD} = 2.0 to 5.5 V			300	ns
						500	ns
$\overline{SCK2}$ rise, fall time	t_{R2}, t_{F2}					1000	ns

Note C is the SO2 output line load capacitance.

(c) UART mode (Dedicated baud rate generator output)

Parameter	Symbol	Test Conditions	MIN.	TYP.	MAX.	Unit
Transfer rate		4.5 V ≤ V_{DD} ≤ 5.5 V			78125	bps
		2.7 V ≤ V_{DD} < 4.5 V			39063	bps
		2.0 V ≤ V_{DD} < 2.7 V			19531	bps
					9766	bps

(d) UART mode (External clock input)

Parameter	Symbol	Test Conditions	MIN.	TYP.	MAX.	Unit
ASCK cycle time	t_{KCY3}	4.5 V ≤ V_{DD} ≤ 5.5 V	800			ns
		2.7 V ≤ V_{DD} < 4.5 V	1600			ns
		2.0 V ≤ V_{DD} < 2.7 V	3200			ns
			4800			ns
ASCK high-/low-level width	t_{KH3}, t_{KL3}	4.5 V ≤ V_{DD} ≤ 5.5 V	400			ns
		2.7 V ≤ V_{DD} < 4.5 V	800			ns
		2.0 V ≤ V_{DD} < 2.7 V	1600			ns
			2400			ns
Transfer rate		4.5 V ≤ V_{DD} ≤ 5.5 V			39063	bps
		2.7 V ≤ V_{DD} < 4.5 V			19531	bps
		2.0 V ≤ V_{DD} < 2.7 V			9766	bps
					6510	bps
ASCK rise, fall time	t_{R3}, t_{F3}				1000	ns

AC Timing Test Point (Excluding X1 Input)

Clock Timing

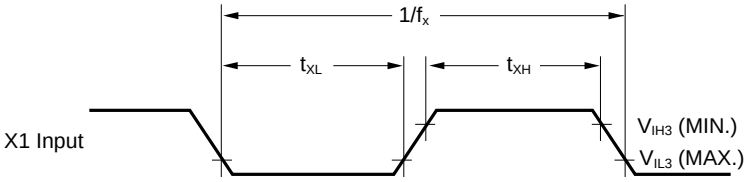

TI Timing

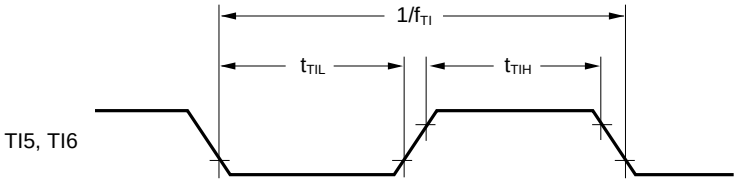

Serial Transfer Timing

3-wired serial I/O mode:

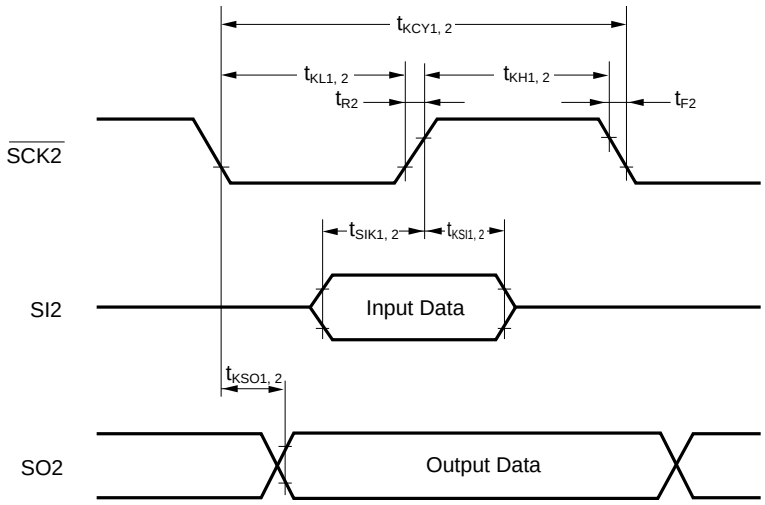

UART mode (external clock input):

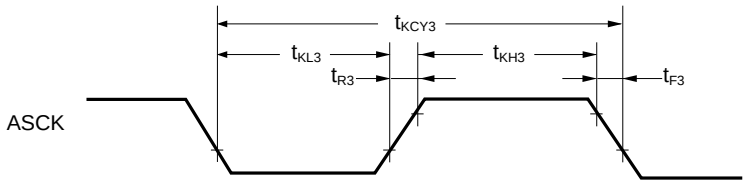

A/D Converter Characteristics (T_A = –40 to +85°C, AV_{DD} = V_{DD} = 2.7 to 5.5 V, AV_{SS} = V_{SS} = 0 V)

Parameter	Symbol	Test Conditions	MIN.	TYP.	MAX.	Unit
Resolution			8	8	8	bit
Total error Note		2.7 V ≤ AV_{REF} ≤ AV_{DD}			1.4	%
Conversion time	t_{CONV}		19.1		200	μs
Sampling time	t_{SAMP}		12/f_{XX}			μs
Analog input voltage	V_{IAN}		AV_{SS}		AV_{REF}	V
Reference voltage	AV_{REF}		2.7		AV_{DD}	V
AV_{REF}-AV_{SS} resistance	R_{AIREF}		4	14		kΩ

Note Excluding quantization error (±1/2 LSB). Shown as a percentage of the full scale value.

Remark f_{XX}: Main system clock frequency (f_X or f_X/2)
f_X: Main system clock oscillation frequency

Data Memory STOP Mode Low Supply Voltage Data Retention Characteristics (T_A = –40 to +85°C)

Parameter	Symbol	Test Conditions	MIN.	TYP.	MAX.	Unit
Data retention supply voltage	V_{DDDR}		1.8		5.5	V
Data retention supply current	I_{DDDR}	V_{DDDR} = 1.8 V		0.1	10	μA
Release signal set time	t_{SREL}		0			μs
Oscillation stabilization wait time	t_{WAIT}	Release by $\overline{\text{RESET}}$		$2^{17}/f_X$		ms
		Release by interrupt		**Note**		ms

Note $2^{12}/f_{XX}$ or $2^{14}/f_{XX}$ to $2^{17}/f_{XX}$ can be selected by bit 0 to bit 2 (OSTS0 to OSTS2) of oscillation stabilization time selection register (OSTS).

Remark f_{XX}: Main system clock frequency (f_X or $f_X/2$)
f_X: Main system clock oscillation frequency

Data Retention Timing (STOP mode released by $\overline{\text{RESET}}$)

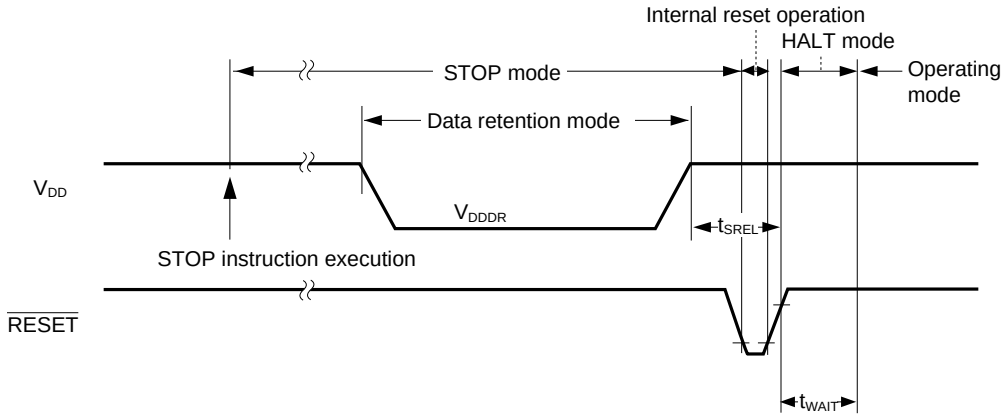

Data Retention Timing (Standby release signal: STOP mode released by interrupt request signal)

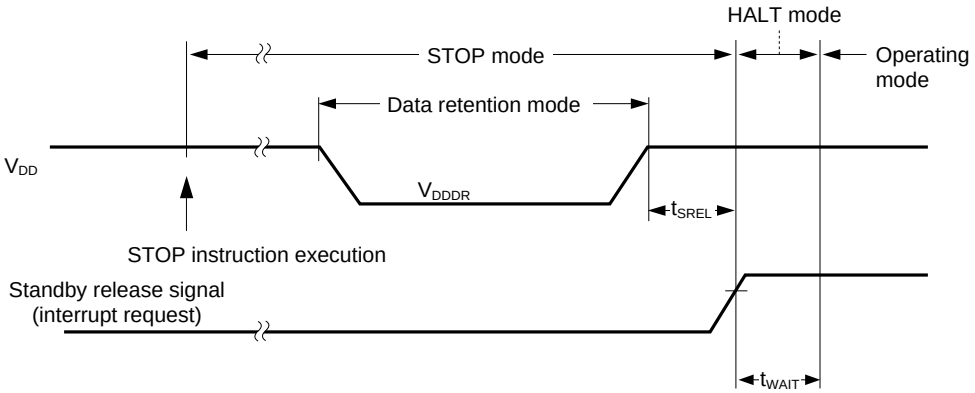

Interrupt Input Timing

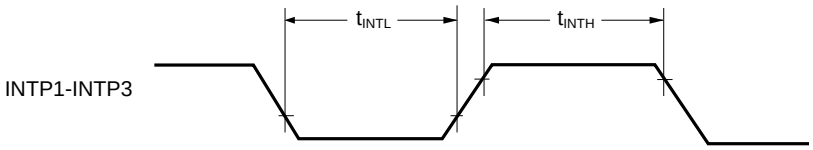

$\overline{\text{RESET}}$ Input Timing

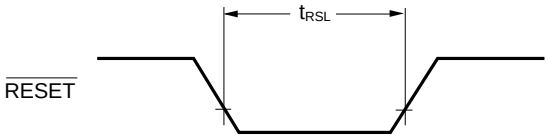

PROM Programming Characteristics

DC Characteristics

(1) PROM Write Mode (T_A = 25 ±5°C, V_{DD} = 6.5 ±0.25 V, V_{PP} = 12.5 ±0.3 V)

Parameter	Symbol	Symbol[Note]	Test Conditions	MIN.	TYP.	MAX.	Unit
Input voltage, high	V_{IH}	V_{IH}		0.7V_{DD}		V_{DD}	V
Input voltage, low	V_{IL}	V_{IL}		0		0.3V_{DD}	V
Output voltage, high	V_{OH}	V_{OH}	I_{OH} = –1 mA	V_{DD} – 1.0			V
Output voltage, low	V_{OL}	V_{OL}	I_{OL} = 1.6 mA			0.4	V
Input leakage current	I_{LI}	I_{LI}	0 ≤ V_{IN} ≤ V_{DD}	–10		+10	μA
V_{PP} supply voltage	V_{PP}	V_{PP}		12.2	12.5	12.8	V
V_{DD} supply voltage	V_{DD}	V_{CC}		6.25	6.5	6.75	V
V_{PP} supply current	I_{PP}	I_{PP}	$\overline{PGM}$ = V_{IL}			50	mA
V_{DD} supply current	I_{DD}	I_{CC}				50	mA

(2) PROM Read Mode (T_A = 25 ±5°C, V_{DD} = 5.0 ±0.5 V, V_{PP} = V_{DD} ±0.6 V)

Parameter	Symbol	Symbol[Note]	Test Conditions	MIN.	TYP.	MAX.	Unit
Input voltage, high	V_{IH}	V_{IH}		0.7V_{DD}		V_{DD}	V
Input voltage, low	V_{IL}	V_{IL}		0		0.3V_{DD}	V
Output voltage, high	V_{OH1}	V_{OH1}	I_{OH} = –1 mA	V_{DD} – 1.0			V
	V_{OH2}	V_{OH2}	I_{OH} = –100 μA	V_{DD} – 0.5			V
Output voltage, low	V_{OL}	V_{OL}	I_{OL} = 1.6 mA			0.4	V
Input leakage current	I_{LI}	I_{LI}	0 ≤ V_{IN} ≤ V_{DD}	–10		+10	μA
Output leakage current	I_{LO}	I_{LO}	0 ≤ V_{OUT} ≤ V_{DD}, $\overline{OE}$ = V_{IH}	–10		+10	μA
V_{PP} supply voltage	V_{PP}	V_{PP}		V_{DD} – 0.6	V_{DD}	V_{DD} + 0.6	V
V_{DD} supply voltage	V_{DD}	V_{CC}		4.5	5.0	5.5	V
V_{PP} supply current	I_{PP}	I_{PP}	V_{PP} = V_{DD}			100	μA
V_{DD} supply current	I_{DD}	I_{CCA1}	$\overline{CE}$ = V_{IL}, V_{IN} = V_{IH}			50	mA

Note Corresponding μPD27C1001A symbol.

AC Characteristics

(1) PROM Write Mode

(a) Page program mode (T_A = 25 ±5°C, V_{DD} = 6.5 ±0.25 V, V_{PP} = 12.5 ±0.3 V)

Parameter	Symbol	Symbol[Note]	Test Conditions	MIN.	TYP.	MAX.	Unit
Address setup time (to $\overline{OE}$ ↓)	t_{AS}	t_{AS}		2			μs
$\overline{OE}$ setup time	t_{OES}	t_{OES}		2			μs
$\overline{CE}$ setup time (to $\overline{OE}$ ↓)	t_{CES}	t_{CES}		2			μs
Input data setup time (to $\overline{OE}$ ↓)	t_{DS}	t_{DS}		2			μs
Address hold time (from $\overline{OE}$ ↑)	t_{AH}	t_{AH}		2			μs
	t_{AHL}	t_{AHL}		2			μs
	t_{AHV}	t_{AHV}		0			μs
Input data hold time (from $\overline{OE}$ ↑)	t_{DH}	t_{DH}		2			μs
$\overline{OE}$ ↑ → Data output float delay time	t_{DF}	t_{DF}		0		250	ns
V_{PP} setup time (to $\overline{OE}$ ↓)	t_{VPS}	t_{VPS}		1.0			ms
V_{DD} setup time (to $\overline{OE}$ ↓)	t_{VDS}	t_{VCS}		1.0			ms
Program pulse width	t_{PW}	t_{PW}		0.095	0.1	0.105	ms
$\overline{OE}$ ↓ → Valid data delay time	t_{OE}	t_{OE}				1	μs
$\overline{OE}$ pulse width during data latching	t_{LW}	t_{LW}		1			μs
$\overline{PGM}$ setup time	t_{PGMS}	t_{PGMS}		2			μs
$\overline{CE}$ hold time	t_{CEH}	t_{CEH}		2			μs
$\overline{OE}$ hold time	t_{OEH}	t_{OEH}		2			μs

(b) Byte program mode (T_A = 25 ±5°C, V_{DD} = 6.5 ±0.25 V, V_{PP} = 12.5 ±0.3 V)

Parameter	Symbol	Symbol[Note]	Test Conditions	MIN.	TYP.	MAX.	Unit
Address setup time (to $\overline{PGM}$ ↓)	t_{AS}	t_{AS}		2			μs
$\overline{OE}$ setup time	t_{OES}	t_{OES}		2			μs
$\overline{CE}$ setup time (to $\overline{PGM}$ ↓)	t_{CES}	t_{CES}		2			μs
Input data setup time (to $\overline{PGM}$ ↓)	t_{DS}	t_{DS}		2			μs
Address hold time (from $\overline{OE}$ ↑)	t_{AH}	t_{AH}		2			μs
Input data hold time (from $\overline{PGM}$ ↑)	t_{DH}	t_{DH}		2			μs
$\overline{OE}$ ↑ → Data output float delay time	t_{DF}	t_{DF}		0		250	ns
V_{PP} setup time (to $\overline{PGM}$ ↓)	t_{VPS}	t_{VPS}		1.0			ms
V_{DD} setup time (to $\overline{PGM}$ ↓)	t_{VDS}	t_{VCS}		1.0			ms
Program pulse width	t_{PW}	t_{PW}		0.095	0.1	0.105	ms
$\overline{OE}$ ↓ → Valid data delay time	t_{OE}	t_{OE}				1	μs
$\overline{OE}$ hold time	t_{OEH}	—		2			μs

Note Corresponding μPD27C1001A symbol.

(2) PROM Read Mode (T_A = 25 ±5°C, V_{DD} = 5.0 ±0.5 V, V_{PP} = V_{DD} ±0.6 V)

Parameter	Symbol	Symbol[Note]	Test Conditions	MIN.	TYP.	MAX.	Unit
Address ↑ → Data output float delay time	t_{ACC}	t_{ACC}	$\overline{CE}$ = $\overline{OE}$ = V_{IL}			800	ns
$\overline{CE}$ ↓ → Valid output delay time	t_{CE}	t_{CE}	$\overline{OE}$ = V_{IL}			800	ns
$\overline{OE}$ ↓ → Valid output delay time	t_{OE}	t_{OE}	$\overline{CE}$ = V_{IL}			200	ns
$\overline{OE}$ ↓ → Data output float delay time	t_{DF}	t_{DF}	$\overline{CE}$ = V_{IL}	0		60	ns
Address → Data hold time	t_{OH}	t_{OH}	$\overline{CE}$ = $\overline{OE}$ = V_{IL}	0			ns

Note Corresponding μPD27C1001A symbol.

(3) PROM Programming Mode (T_A = 25°C, V_{SS} = 0 V)

Parameter	Symbol	Test Conditions	MIN.	TYP.	MAX.	Unit
PROM programming mode setup time	tSMA		10			μs

PROM Write Mode Timing (page program mode)

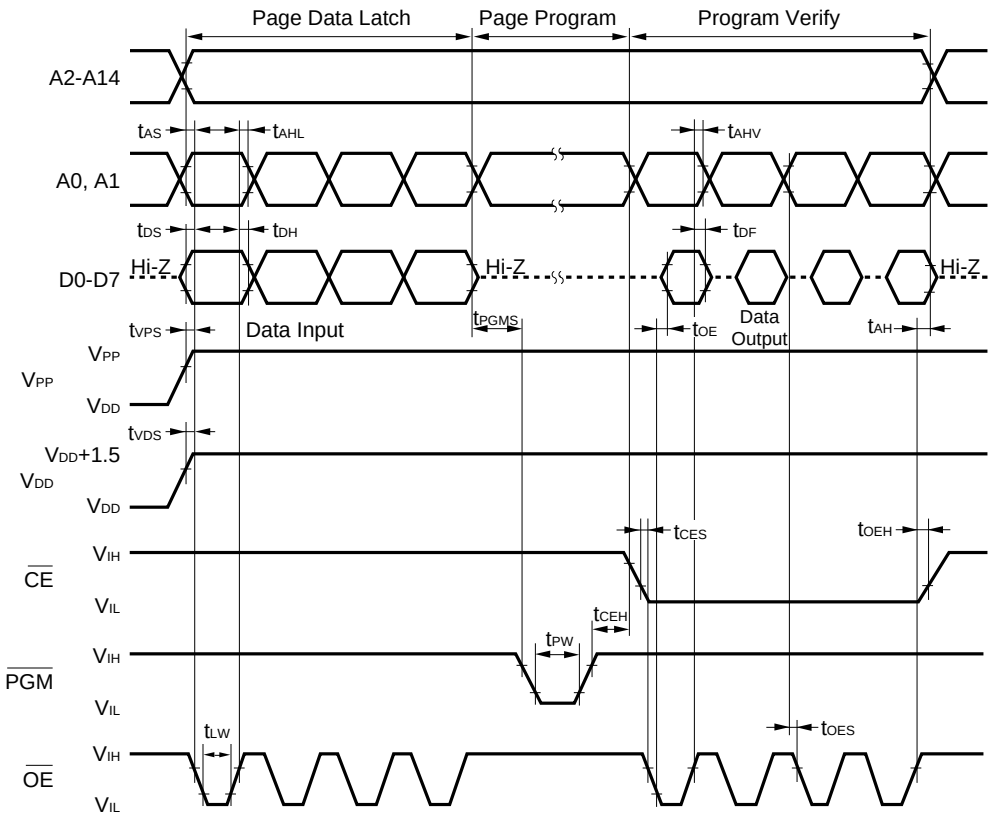

PROM Write Mode Timing (byte program mode)

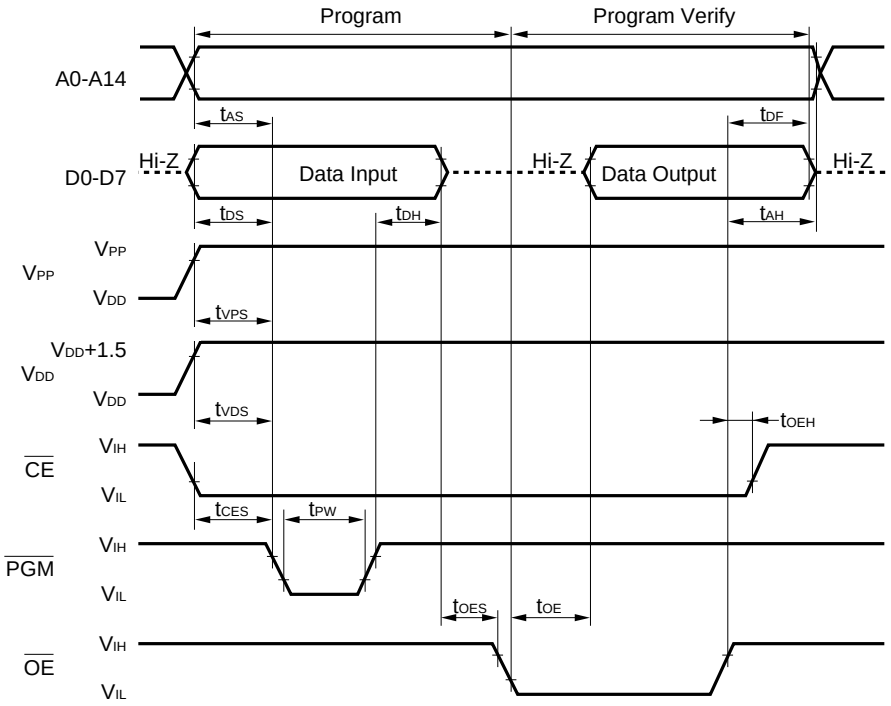

Cautions 1. V_{DD} should be applied before V_{PP}, and removed after V_{PP}.

2. V_{PP} must not exceed +13.5 V including overshoot.

3. Reliability may be adversely affected if removal/reinsertion is performed while + 12.5 V is being applied to V_{PP}.

PROM Read Mode Timing

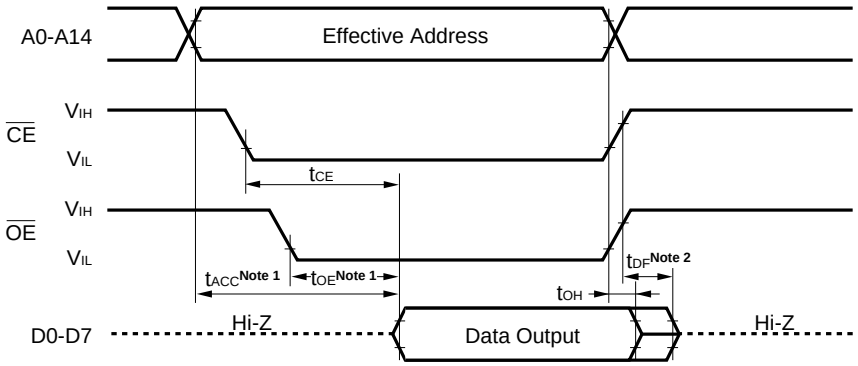

Notes 1. If you want to read within the range of t_{ACC}, make the $\overline{OE}$ input delay time from the fall of $\overline{CE}$ a maximum of $t_{ACC} - t_{OE}$.

2. t_{DF} is the time from when either $\overline{OE}$ or $\overline{CE}$ first reaches V_{IH}.

PROM Programming Mode Setting Timing

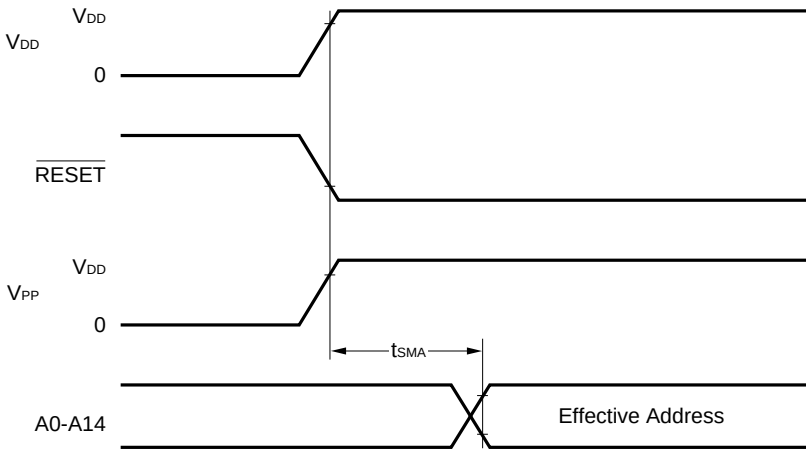

7. PACKAGE DRAWINGS

42PIN PLASTIC SHRINK DIP (600 mil)

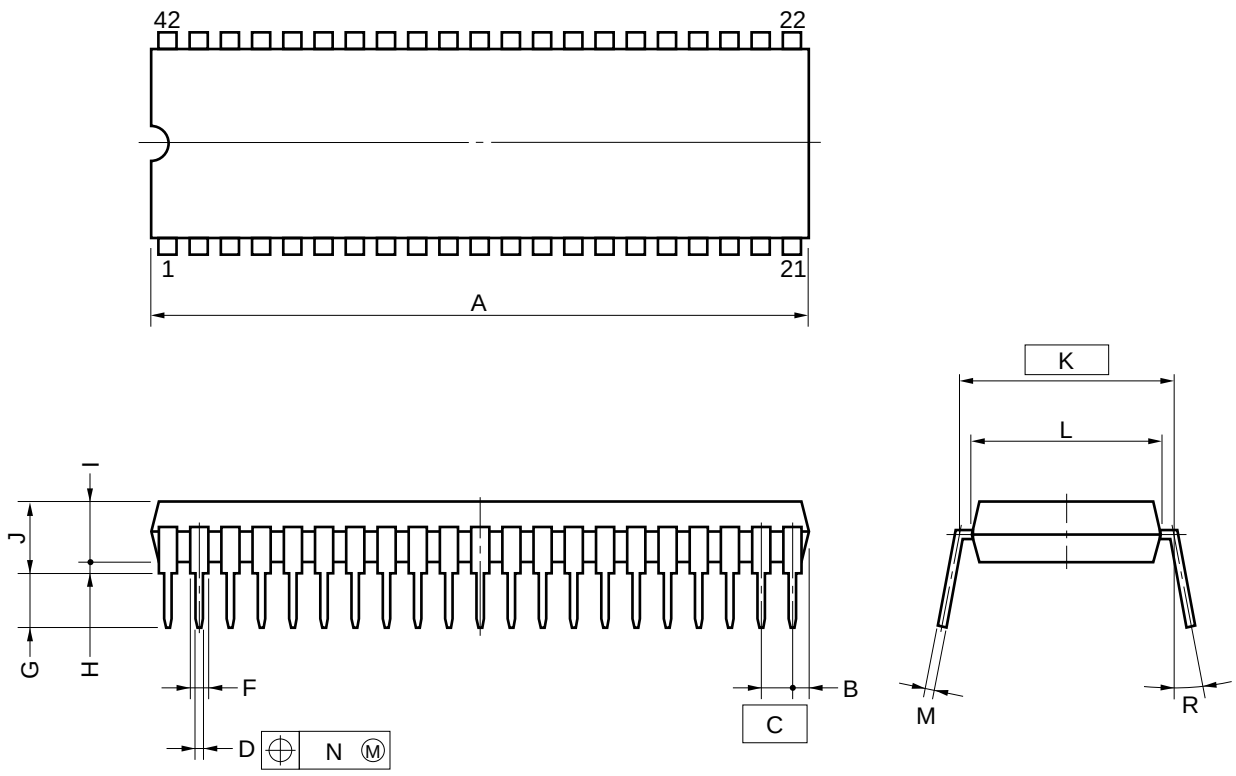

NOTES

1) Each lead centerline is located within 0.17 mm (0.007 inch) of its true position (T.P.) at maximum material condition.

2) Item "K" to center of leads when formed parallel.

ITEM	MILLIMETERS	INCHES
A	39.13 MAX.	1.541 MAX.
B	1.78 MAX.	0.070 MAX.
C	1.778 (T.P.)	0.070 (T.P.)
D	0.50±0.10	$0.020^{+0.004}_{-0.005}$
F	0.9 MIN.	0.035 MIN.
G	3.2±0.3	0.126±0.012
H	0.51 MIN.	0.020 MIN.
I	4.31 MAX.	0.170 MAX.
J	5.08 MAX.	0.200 MAX.
K	15.24 (T.P.)	0.600 (T.P.)
L	13.2	0.520
M	$0.25^{+0.10}_{-0.05}$	$0.010^{+0.004}_{-0.003}$
N	0.17	0.007
R	0~15°	0~15°

P42C-70-600A-1

Remark The shape and material of ES versions are the same as those of mass-produced versions.

μPD78P083GB(A)-3B4

44 PIN PLASTIC QFP (□10)

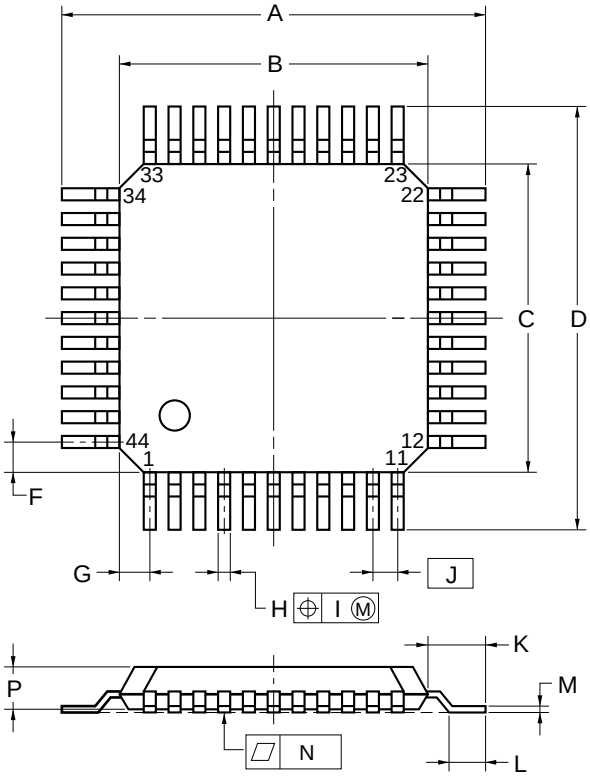

detail of lead end

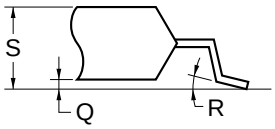

NOTE

Each lead centerline is located within 0.15 mm (0.006 inch) of its true position (T.P.) at maximum material condition.

ITEM	MILLIMETERS	INCHES
A	13.6±0.4	$0.535^{+0.017}_{-0.016}$
B	10.0±0.2	$0.394^{+0.008}_{-0.009}$
C	10.0±0.2	$0.394^{+0.008}_{-0.009}$
D	13.6±0.4	$0.535^{+0.017}_{-0.016}$
F	1.0	0.039
G	1.0	0.039
H	0.35±0.10	$0.014^{+0.004}_{-0.005}$
I	0.15	0.006
J	0.8 (T.P.)	0.031 (T.P)
K	1.8±0.2	$0.071^{+0.008}_{-0.009}$
L	0.8±0.2	$0.031^{+0.009}_{-0.008}$
M	$0.15^{+0.10}_{-0.05}$	$0.006^{+0.004}_{-0.003}$
N	0.10	0.004
P	2.7	0.106
Q	0.1±0.1	0.004±0.004
R	5°±5°	5°±5°
S	3.0 MAX.	0.119 MAX.

P44GB-80-3B4-3

Remark The shape and material of ES versions are the same as those of mass-produced versions.

μPD78P083GB(A)-3BS-MTX (Under planning)

44 PIN PLASTIC QFP (□10)

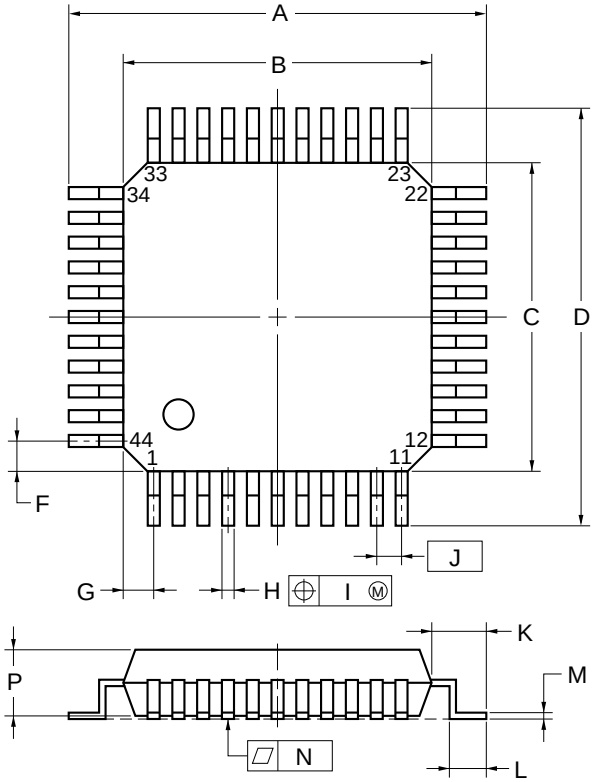

detail of lead end

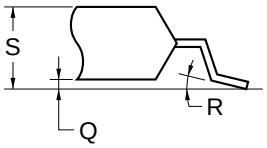

NOTE

Each lead centerline is located within 0.16 mm (0.007 inch) of its true position (T.P.) at maximum material condition.

ITEM	MILLIMETERS	INCHES
A	13.2±0.2	$0.520^{+0.008}_{-0.009}$
B	10.0±0.2	$0.394^{+0.008}_{-0.009}$
C	10.0±0.2	$0.394^{+0.008}_{-0.009}$
D	13.2±0.2	$0.520^{+0.008}_{-0.009}$
F	1.0	0.039
G	1.0	0.039
H	$0.37^{+0.08}_{-0.07}$	$0.015^{+0.003}_{-0.004}$
I	0.16	0.007
J	0.8 (T.P.)	0.031 (T.P.)
K	1.6±0.2	0.063±0.008
L	0.8±0.2	$0.031^{+0.009}_{-0.008}$
M	$0.17^{+0.06}_{-0.05}$	$0.007^{+0.002}_{-0.003}$
N	0.10	0.004
P	2.7	0.106
Q	0.125±0.075	0.005±0.003
R	$3^{\circ}{}^{+7^{\circ}}_{-3^{\circ}}$	$3^{\circ}{}^{+7^{\circ}}_{-3^{\circ}}$
S	3.0 MAX.	0.119 MAX.

S44GB-80-3BS

Remark The shape and material of ES versions are the same as those of mass-produced versions.

8. RECOMMENDED SOLDERING CONDITIONS

It is recommended that the μPD78P083(A) be soldered under the following conditions.
For details on the recommended soldering conditions, refer to information document **"Semiconductor Device Mounting Technology Manual" (C10535E)**.

For soldering methods and conditions other than those recommended, please contact your NEC sales representative.

Table 8-1. Soldering Conditions for Surface Mount Types

μPD78P083GB(A)-3B4 : 44-pin plastic QFP (10 × 10 mm)

Soldering Method	Soldering Conditions	Symbol
Infrared ray reflow	Package peak temperature: 235˚C, Reflow time: 30 seconds or less (at 210˚C or higher), Number of reflow processes: 3 or less	IR35-00-3
VPS	Package peak temperature: 215˚C, Reflow time: 40 seconds or less (at 200˚C or higher), Number of reflow processes: 3 or less	VP15-00-3
Wave soldering	Solder temperature: 260˚C or below, Flow time: 10 seconds or less, Number of flow processes: 1, Preheating temperature: 120˚C max. (package surface temperature)	WS60-00-1
Partial heating	Pin temperature: 300˚C or below, Flow time: 3 seconds or less (per pin row)	—

Cautions 1. Do not use different soldering methods together (except for partial heating method).
2. Soldering conditions for the μPD78P083GB(A)-3BS-MTX is not fixed because this product is under planning.

Table 8-2. Soldering Condition for Hole-Through Types

μPD78P083CU(A) : 42-pin plastic shrink DIP (600 mil)

Soldering Method	Soldering Conditions
Wave Soldering (only pins)	Solder temperature: 260°C or below, Flow time: 10 seconds or less
Partial heating	Pin temperature: 300°C or below, Flow time: 3 seconds or less (per pin)

Caution Apply wave soldering only to the pins and be careful so as not to bring solder into direct contact with the package.

APPENDIX A. DEVELOPMENT TOOLS

The following development tools are available to support development of systems using the μPD78P083(A).

Language Processing Software

RA78K/0 Notes 1, 2, 3, 4	Assembler package common to the 78K/0 Series
CC78K/0 Notes 1, 2, 3, 4	C compiler package common to the 78K/0 Series
DF78083 Notes 1, 2, 3, 4	Device file used for the μPD78083 Subseries
CC78K/0–L Notes 1, 2, 3, 4	C compiler library source file common to the 78K/0 Series

PROM Writing Tools

PG-1500	PROM programmer
PA-78P083CU PA-78P083GB	Programmer adapter connected to the PG-1500
PG-1500 Controller Notes 1, 2	Control program for the PG-1500

Debugging Tools

IE-78000-R	In-circuit emulator common to the 78K/0 Series
IE-78000-R-A	In-circuit emulator common to the 78K/0 Series (for integrated debugger)
IE-78000-R-BK	Break board common to the 78K/0 Series
IE-78078-R-EM	Emulation board common to the μPD78078 Subseries
EP-78083CU-R EP-78083GB-R	Emulation probe for the μPD78083 Subseries
EV-9200G-44	Socket mounted on the target system board prepared for 44-pin plastic QFP (GB-3B4, GB-3BS-MTX type)
SM78K0 Notes 5, 6, 7	System simulator common to the 78K/0 Series
ID78K0 Notes 4, 5, 6, 7	Integrated debugger for IE-78000-R-A
SD78K/0 Notes 1, 2	Screen debugger for the IE-78000-R
DF78083 Notes 1, 2, 4, 5, 6, 7	Device file used for the μPD78083 Subseries

Notes **1.** Based on PC-9800 series (MS-DOS™)
2. Based on IBM PC/AT™ and its compatibles (PC DOS™/IBM DOS™/MS-DOS)
3. Based on HP9000 series 300™ (HP-UX™)
4. Based on HP9000 series 700™ (HP-UX), SPARCstation™ (SunOS™), and EWS4800 series (EWS-UX/V)
5. Based on PC-9800 series (MS-DOS + Windows™)
6. IBM PC/AT and its compatibles (PC DOS/IBM DOS/MS-DOS + Windows)
7. Based on NEWS™ (NEWS-OS™)

Remarks **1.** Please refer to the **78K/0 Series Selection Guide (U11126E)** for information on the third party development tools.
2. Use the RA78K/0, CC78K/0, SM78K0, ID78K0, and SD78K/0 in combination with the DF78083.

OS

MX78K/0 Notes 1, 3, 4	78K/0 Series common embedded OS

Fuzzy Inference Development Support System

FE9000 Note 1/FE9200 Note 2	Fuzzy knowledge data creation tool
FT9080 Note 1/FT9085 Note 3	Translator
FI78K0 Notes 1, 3	Fuzzy inference module
FD78K0 Notes 1, 3	Fuzzy inference debugger

Notes **1.** Based on PC-9800 series (MS-DOS)

2. Based on IBM PC/AT and its compatibles (PC DOS/IBM DOS/MS-DOS+Windows)

3. Based on IBM PC/AT and its compatibles (PC DOS/IBM DOS/MS-DOS)

4. Based on HP9000 series 300 and series 700 (HP-UX), SPARCstation (SunOS), and EWS4800 series (EWS-UX/V)

Remark Please refer to the **78K/0 Series Selection Guide (U11126E)** for information on the third party development tools.

APPENDIX B. RELATED DOCUMENTS

Documents Related to Devices

Document Name		Document No.	
		Japanese	English
μPD78083 Subseries User's Manual		U12176J	U12176E
78K/0 Series User's Manual—Instructions		IEU-849	IEU-1372
78K/0 Series Instruction Table		U10903J	—
78K/0 Series Instruction Set		U10904J	—
μPD78083 Subseries Special Function Register Table		IEM-5599	—
78K/0 Series Application Note	Basic (III)	IEA-767	U10182E

Caution The contents of the documents listed above are subject to change without prior notice. Make sure to use the latest edition when starting design.

Documents Related to Development Tools (User's Manual)

Document Name		Document No.	
		Japanese	English
RA78K Series Assembler Package	Operation	EEU-809	EEU-1399
	Language	EEU-815	EEU-1404
RA78K0 Assembler Package	Operation	U11802J	U11802E
	Assembly language	U11801J	U11801E
	Structured assembly language	U11789J	U11789E
RA78K Series Structured Assembler Preprocessor		EEU-817	EEU-1402
CC78K Series C Compiler	Operation	EEU-656	EEU-1280
	Language	EEU-655	EEU-1284
CC78K/0 C Compiler	Operation	U11517J	U11517E
	Language	U11518J	U11518E
CC78K/0 C Compiler Application Note	Programming know-how	EEA-618	EEA-1208
CC78K Series Library Source File		EEU-777	—
PG-1500 PROM Programmer		EEU-651	EEU-1335
PG-1500 Controller PC-9800 Series (MS-DOS) Based		EEU-704	EEU-1291
PG-1500 Controller IBM PC Series (PC DOS) Based		EEU-5008	U10540E
IE-78000-R		EEU-810	U11376E
IE-78000-R-BK		EEU-867	EEU-1427
IE-78000-R-A		U10057J	U10057E
IE-78078-R-EM		U10775J	EEU-1504
EP-78083		EEU-5003	EEU-1529
SM78K0 System Simulator Windows Based	Reference	U10181J	U10181E
SM78K Series System Simulator	External parts user open interface specification	U10092J	U10092E
ID78K0 Integrated Debugger EWS Based	Reference	U11151J	—
ID78K0 Integrated Debugger PC Based	Reference	U11539J	U11539E
ID78K0 Integrated Debugger	Guides	U11649J	U11649E
SD78K/0 Screen Debugger	Introduction	EEU-852	U10539E
PC-9800 Series (MS-DOS) Based	Reference	U10952J	—
SD78K/0 Screen Debugger	Introduction	EEU-5024	EEU-1414
IBM PC/AT (PC DOS) Based	Reference	U11279J	U11279E

Caution The contents of the documents listed above are subject to change without prior notice. Make sure to use the latest edition when starting design.

Documents Related to Embedded Software (User's Manual)

Document Name		Document No.	
		Japanese	English
78K/0 Series OS MX78K0	Basic	EEU-5010	—
Fuzzy Knowledge Data Creation Tool		EEU-829	EEU-1438
78K/0, 78K/II, and 87AD Series Fuzzy Inference Development Support System Translator		EEU-862	EEU-1444
78K/0 Series Fuzzy Inference Development Support System Fuzzy Inference Module		EEU-858	EEU-1441
78K/0 Series Fuzzy Inference Development Support System Fuzzy Inference Debugger		EEU-921	EEU-1458

Other Documents

Document Name	Document No.	
	Japanese	English
IC Package Manual	C10943X	
Semiconductor Device Mounting Technology Manual	C10535J	C10535E
Quality Grades on NEC Semiconductor Devices	C11531J	C11531E
NEC Semiconductor Device Reliability/Quality Control System	C10983J	C10983E
Electrostatic Discharge (ESD) Test	MEM-539	—
Guide to Quality Assurance for Semicoductor Devices	C11893J	MEI-1202
Microcontroller-Related Product Guide – Third Party Products –	U11416J	—

Caution The contents of the documents listed above are subject to change without prior notice. Be sure to use the latest edition when starting design.

NOTES FOR CMOS DEVICES

① PRECAUTION AGAINST ESD FOR SEMICONDUCTORS

Note: Strong electric field, when exposed to a MOS device, can cause destruction of the gate oxide and ultimately degrade the device operation. Steps must be taken to stop generation of static electricity as much as possible, and quickly dissipate it once, when it has occurred. Environmental control must be adequate. When it is dry, humidifier should be used. It is recommended to avoid using insulators that easily build static electricity. Semiconductor devices must be stored and transported in an anti-static container, static shielding bag or conductive material. All test and measurement tools including work bench and floor should be grounded. The operator should be grounded using wrist strap. Semiconductor devices must not be touched with bare hands. Similar precautions need to be taken for PW boards with semiconductor devices on it.

② HANDLING OF UNUSED INPUT PINS FOR CMOS

Note: No connection for CMOS device inputs can be cause of malfunction. If no connection is provided to the input pins, it is possible that an internal input level may be generated due to noise, etc., hence causing malfunction. CMOS devices behave differently than Bipolar or NMOS devices. Input levels of CMOS devices must be fixed high or low by using a pull-up or pull-down circuitry. Each unused pin should be connected to V_{DD} or GND with a resistor, if it is considered to have a possibility of being an output pin. All handling related to the unused pins must be judged device by device and related specifications governing the devices.

③ STATUS BEFORE INITIALIZATION OF MOS DEVICES

Note: Power-on does not necessarily define initial status of MOS device. Production process of MOS does not define the initial operation status of the device. Immediately after the power source is turned ON, the devices with reset function have not yet been initialized. Hence, power-on does not guarantee out-pin levels, I/O settings or contents of registers. Device is not initialized until the reset signal is received. Reset operation must be executed immediately after power-on for devices having reset function.

Regional Information

Some information contained in this document may vary from country to country. Before using any NEC product in your application, please contact the NEC office in your country to obtain a list of authorized representatives and distributors. They will verify:

- Device availability
- Ordering information
- Product release schedule
- Availability of related technical literature
- Development environment specifications (for example, specifications for third-party tools and components, host computers, power plugs, AC supply voltages, and so forth)
- Network requirements

In addition, trademarks, registered trademarks, export restrictions, and other legal issues may also vary from country to country.

NEC Electronics Inc. (U.S.)
Santa Clara, California
Tel: 800-366-9782
Fax: 800-729-9288

NEC Electronics (Germany) GmbH
Duesseldorf, Germany
Tel: 0211-65 03 02
Fax: 0211-65 03 490

NEC Electronics (UK) Ltd.
Milton Keynes, UK
Tel: 01908-691-133
Fax: 01908-670-290

NEC Electronics Italiana s.r.1.
Milano, Italy
Tel: 02-66 75 41
Fax: 02-66 75 42 99

NEC Electronics (Germany) GmbH
Benelux Office
Eindhoven, The Netherlands
Tel: 040-2445845
Fax: 040-2444580

NEC Electronics (France) S.A.
Velizy-Villacoublay, France
Tel: 01-30-67 58 00
Fax: 01-30-67 58 99

NEC Electronics (France) S.A.
Spain Office
Madrid, Spain
Tel: 01-504-2787
Fax: 01-504-2860

NEC Electronics (Germany) GmbH
Scandinavia Office
Taeby, Sweden
Tel: 08-63 80 820
Fax: 08-63 80 388

NEC Electronics Hong Kong Ltd.
Hong Kong
Tel: 2886-9318
Fax: 2886-9022/9044

NEC Electronics Hong Kong Ltd.
Seoul Branch
Seoul, Korea
Tel: 02-528-0303
Fax: 02-528-4411

NEC Electronics Singapore Pte. Ltd.
United Square, Singapore 1130
Tel: 253-8311
Fax: 250-3583

NEC Electronics Taiwan Ltd.
Taipei, Taiwan
Tel: 02-719-2377
Fax: 02-719-5951

NEC do Brasil S.A.
Sao Paulo-SP, Brasil
Tel: 011-889-1680
Fax: 011-889-1689

J96. 8

The related documents indicated in this publication may include preliminary versions. However, preliminary versions are not marked as such.

The export of these products from Japan is regulated by the Japanese government. The export of some or all of these products may be prohibited without governmental license. To export or re-export some or all of these products from a country other than Japan may also be prohibited without a license from that country. Please call an NEC sales representive.

M4 96.5